MODEL : LH-1152
List No : 0128-09

PARTS LIST

Published:09/20/2016

CONTENTS

MACHINE FRAME & MISCELLANEOUS COVER COMPONENTS 1
MAIN SHAFT,NEEDLE FEED & NEEDLE BAR COMPONENTS 3
HOOK & HOOK DRIVING SHAFT COMPONENTS 7
FEED MECHANISM COMPONENTS 9
PRESSER BAR & TENSION RELEASE COMPONENTS(FOR LH-2178-7) 13
EXCLUSIVE PARTS BY STITCH SPECIFICATION (1) 15
EXCLUSIVE PARTS BY STITCH SPECIFICATION (2) 17
LUBRICATION COMPONENTS 19
OIL RESERVOIR & KNEE LIFTER COMPONENTS 21
THREAD TENSION CONTROLLER COMPONENTS 23
BELT COVER & BOBBIN WINDER COMPONENTS 25
BELT COVER & BOBBIN WINDER COMPONENTS (SPECIAL PARTS) 27
THREAD STAND COMPONENTS 29
FOR STITCH SPECIFICATION "S","A","G" (1) 31
FOR STITCH SPECIFICATION "S","A","G" (2) 33
TABLE OF EXCHANGING GAUGE PARTS COMMON TO ALL STITCH SPECIFICATIONS 37
FOR STITCH SPECIFICATION"F 39
LIST FOR INFORMATION OF CHANGE 41

MACHINE FRAME & MISCELLANEOUS COVER COMPONENTS

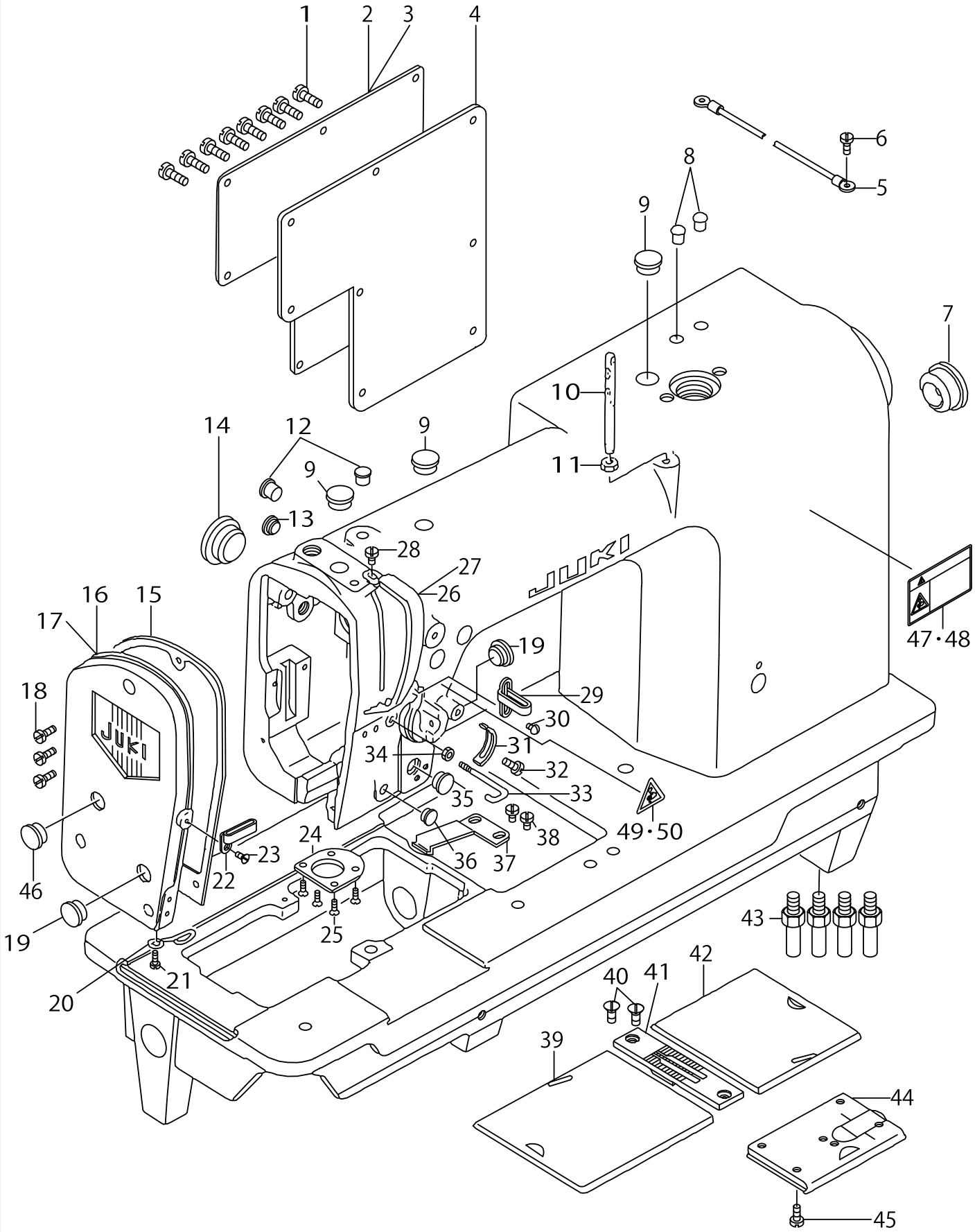

MACHINE FRAME & MISCELLANEOUS COVER COMPONENTS

No.	C-ons	Le-vel	Parts No.	Replacement	Supply Code	Parts name	Qty	R-ep. Q-TY	Status	Spec	Remarks
1			SS7110910SP	SS7110910TP	Replaced	SCREW 11/64-40 L=8.5	8	1.00			
2			10100907		Disconinue	SIDE PLATE	1				
3			10602902			SLIDE PLATE	1				FOR URBAN WH
4			10101004			GASKET	1				
5			10741759			GROUND WIRE ASM.	1				
6			SS7110710SP			SCREW 11/64-40 L=7	1				
7			TA2351004R0			RUBBER PLUG	1				
8			TA0550604R0			RUBBER PLUG	2				
9			TA1250504R0			RUBBER PLUG	3				
10			B1114051000			NEEDLE THREAD GUIDE P	1				
11			NS6620310SP			NUT 3/16-32	1				
12			TA0750704R0			RUBBER PLUG	2				
13			TA0750404R0			PLUG D=7.5 L=3.5	1				
14			TA2100904R0			RUBBER PLUG	1				
15			10100808		Disconinue	GASKET	1				
16			10100758		Disconinue	FACE PLATE ASM.	1				
17			10160851		Disconinue	FACE PLATE ASM.	1				FOR URBAN WH
18			SS7111120SP	SS7111120TP	Replaced	SCREW 11/64-40 L=10.5	3	1.00			
19			TA1250406R0			RUBBER PLUG D=12.5 L=4	2				
20			10101509		Disconinue	THREAD GUIDE, D	1				
21			SS5090610SP			SCREW 9/64-40 L=6	1				
22			10101400			THREAD GUIDE, C	1				
23			SS2090710SP	SS2090710TP	Replaced	SCREW 9/64-40 L=7	7	1.00			
24			10101103		Disconinue	PLATE	1				
25			SS2080810SP			SCREW 1/8-44 L=7.5	4				
26			B1123552000A			THREAD TAKE UP LEVER (	1				
27			B1123552A00			THRED TAKE-UP LEVER C	1				FOR URBAN WH
28			SS7110510SP			SCREW 11/64-40 L=5	1				
29			10101301		Disconinue	THREAD GUIDE, B	1				REPLACE THIS
30			SS5090610SP			SCREW 9/64-40 L=6	1				
31			B3138512000			TAKE-UP SPRING ADJUSTI	1				
32			SS7090520SP	SS7090520TP	Replaced	SCREW 9/64-40 L= 4.5	1	1.00			
33			10101202			THREAD GUIDE, A	1				
34			B1132512000		Disconinue	NUT	1				
35			TA1050604R0			RUBBER PLUG	1				
36			TA0750404R0			PLUG D=7.5 L=3.5	1				
37			B1111563000			BED SLIDE SPRING	1				
38			SS7110510SP			SCREW 11/64-40 L=5	2				
39			10146009		Disconinue	BED SLIDE, LEFT 3/32" TC	1				EXCHANGING C
40			SS2110920TP			SCREW 11/64-40 L=8.5	2				
41			10135309		Disconinue	THROAT PLATE 3/16	1				EXCHANGING C
42			10146504		Disconinue	BED SLIDE, RIGHT 3/32" T	1				EXCHANGING C
43			22602601			BED SCREW STUD	3				
44			10100659		Disconinue	BED SLIDE ASM.	1				REPLACE THIS
45			SS3130710SP			SCREW 13/64-32 L=6.5	3				
46			TA2050406R0			RUBBER PLUG	1				
47			CM300200101			SAFETY LABEL, 1(SMALL).	1				FOR USE IN JAF
48			CM3002001A1			SAFETY LABEL.,3 (SMALL)	1				EXCEPT JE & U
49			CM300200001			ATTENTION SEAL	1				FOR JE
50			CM3002000B1			LABEL(16)	1				FOR USE IN JAF

MAIN SHAFT,NEEDLE FEED & NEEDLE BAR COMPONENTS

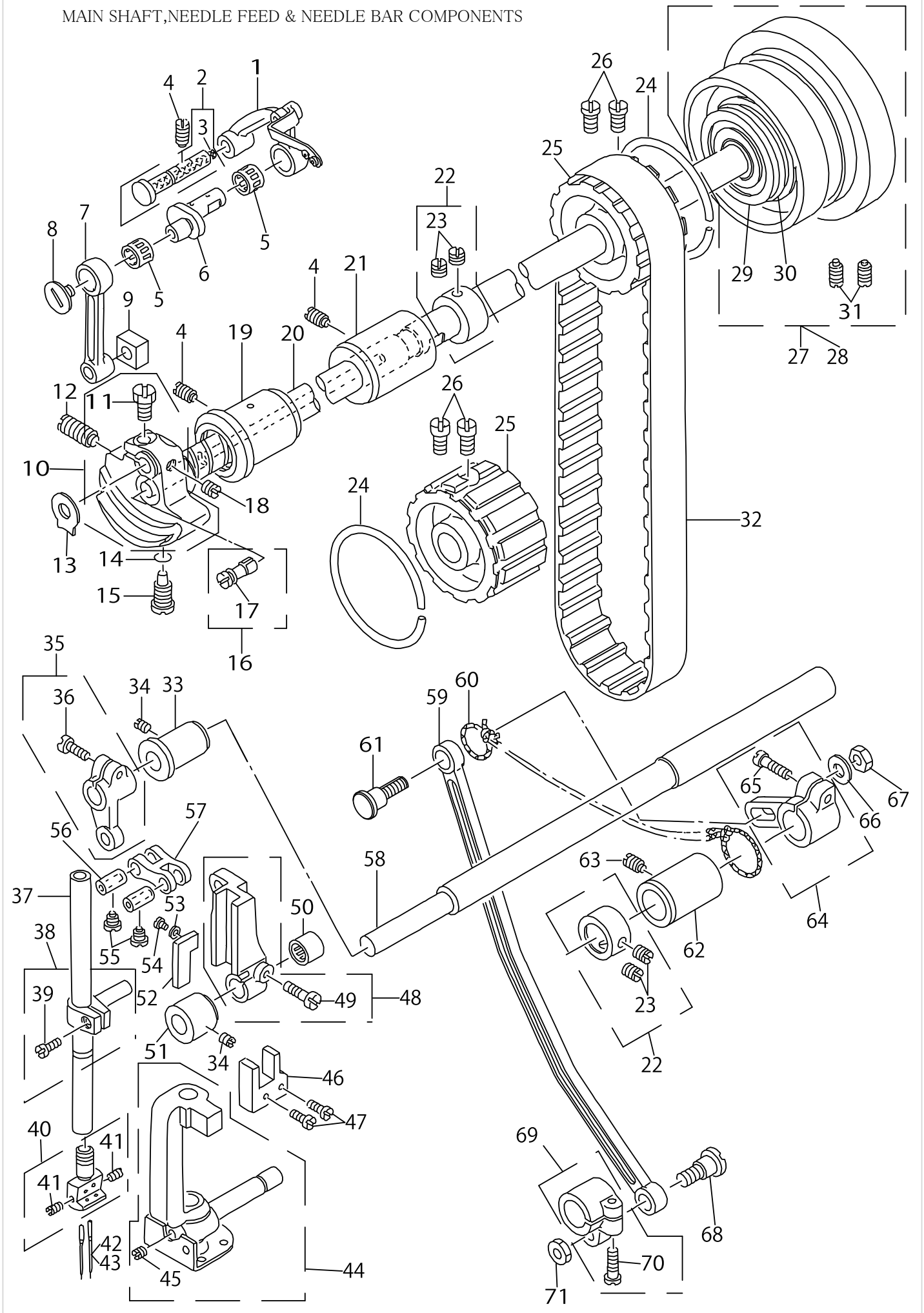

MAIN SHAFT,NEEDLE FEED & NEEDLE BAR COMPONENTS

No.	C-ons	Le-vel	Parts No.	Replacement	Supply Code	Parts name	Qty	R-ep. Q-TY	Status	Spec	Remarks
1			10102853			THREAD TAKE-UP LEVER	1				
2			B19045520A0			CRANK SHAFT STUD ASM.	1				
3		*	CQ3500000F0			OIL FELT	0.1				
4			SS8151150SP	SS8151150TP	Replaced	SCREW 15/64-28 L=10.5	3	1.00			
5			B1905541B00			NEEDLE BEARING	2				SELECTIVE PAI
6			10102705			NEEDLE BAR CRANK	1				
7			10104701		Disconinue	NEEDLE BAR CRANK ROD	1				
8			B1903552000			LEFT SCREW	1				
9			B1414555000			SLIDE BLOCK	1				
10			10102655		Disconinue	COUNTERWEIGHT ASM.	1				
11		*	SS9661120CP			SCREW 1/4-40 L=10.5	1				
12			SS8681950SP			SCREW 9/32-28 L=19	1				
13			B1212552A00			COUNTERWEIGHT PROTE(	1				
14			RO044240100			RUBBER RING	1				
15			SS7681650TP			SCREW 9/32-28 L=16	1				
16			B12135520A0A			OIL AMOUNT ADJUSTING I	1				
17		*	RO029180100			RUBBER RING	1				
18			SS8660610TP			SCREW 1/4-40 L=6	1				
19			10188902			MAIN SHAFT BUSHING, FR	1				
20			10102507			MAIN SHAFT	1				
21			10103000		Disconinue	MAIN SHAFT BUSHING, IN'	1				
22			22904155			MAIN SHAFT THRUST COL	2				
23		*	SS8660610TP			SCREW 1/4-40 L=6	4				
24			B1214019000			SPROCKET RING	2				
25			10103109			SPROCKET WHEEL	2				
26			SS6661110SP			SCREW 1/4-40 L=11	4				
27			10103257		Disconinue	HAND WHEEL ASM.	1				
28			10161057			HAND WHEEL ASM.	1				FOR URBAN WH
29		*	SB120000100			BEARING D=20X47	1				
30		*	RO437200200			RUBBER RING	1				
31		*	SS8151550SP			SCREW 15/64-28 L=15	2				
32			10103406			TIMING BELT	1				
33			10121705			BUSHING	1				
34			SS8150510TP			SCREW 15/64-28 L= 4.7	2				
35			B29074150A0		Disconinue	DRIVING CRANK ASM.	1				
36		*	SS6121220TP			SCREW 3/16-28 L=11.5	1				
37			10104602			NEEDLE BAR	1				
38			10104859		Disconinue	NEEDLE BAR CONNECTIO	1				
39		*	SS7090910SP	SS7090910TP	Replaced	SCREW 9/64-40 L= 8.5	1	1.00			
40			10147858			NEEDLE CLAMP ASM. 3/16	1				EXCHANGING (
41		*	SS8080660TP			SCREW 1/8-44 L=5.5	2				
42			MDP500B1400			NEEDLE DPX5 #14	2				EXCEPT JE
43			MC200500900			NEEDLE 134 90	2				FOR JE
44			10121069		Disconinue	NEEDLE BAR FRAME ASM.	1				
45		*	SS8110510SP	SS8110520TP	Replaced	SCREW 11/64-40 L=5	1	1.00			
46			10121309		Disconinue	NEEDLE BAR FRAME POSI'	1				
47			SS7090910SP	SS7090910TP	Replaced	SCREW 9/64-40 L= 8.5	2	1.00			
48			10121556			SLIDE BLOCK GUIDE ASM.	1				
49		*	SS6121610TP			SCREW 3/16-28 L=15.5	1				
50			B2913412N00			BEARING	1				
51			10121408		Disconinue	BUSHING	1				
52			B2915415000		Disconinue	FELT	1				
53			WP0250516SD			WASHER 2.5X6X0.5	1				
54			SS6060410TP			SCREW 3/32-56 L= 3.5	1				
55			SS6090660TP			SCREW 9/64-40 L=6	2				
56			B1412352A00	B1412352B00	Replaced	NEEDLE BAR LINK PIN, A	2	1.00	選択部品	A:公差 +0.011～	SELECTIVE PAI
56			B1412352A00	B1412352C00	Replaced Replace	NEEDLE BAR LINK PIN, A	2	1.00	選択部品	B:公差 +0.006～	SELECTIVE PAI
56			B1412352A00	B1412352D00	Replaced Replace	NEEDLE BAR LINK PIN, A	2	1.00	選択部品	C:公差 +0.001～	SELECTIVE PAI
57			B2906415000			DRIVING LINK	1				
58			10121606			NEEDLE BAR FRAME ROCI	1				

MAIN SHAFT,NEEDLE FEED & NEEDLE BAR COMPONENTS

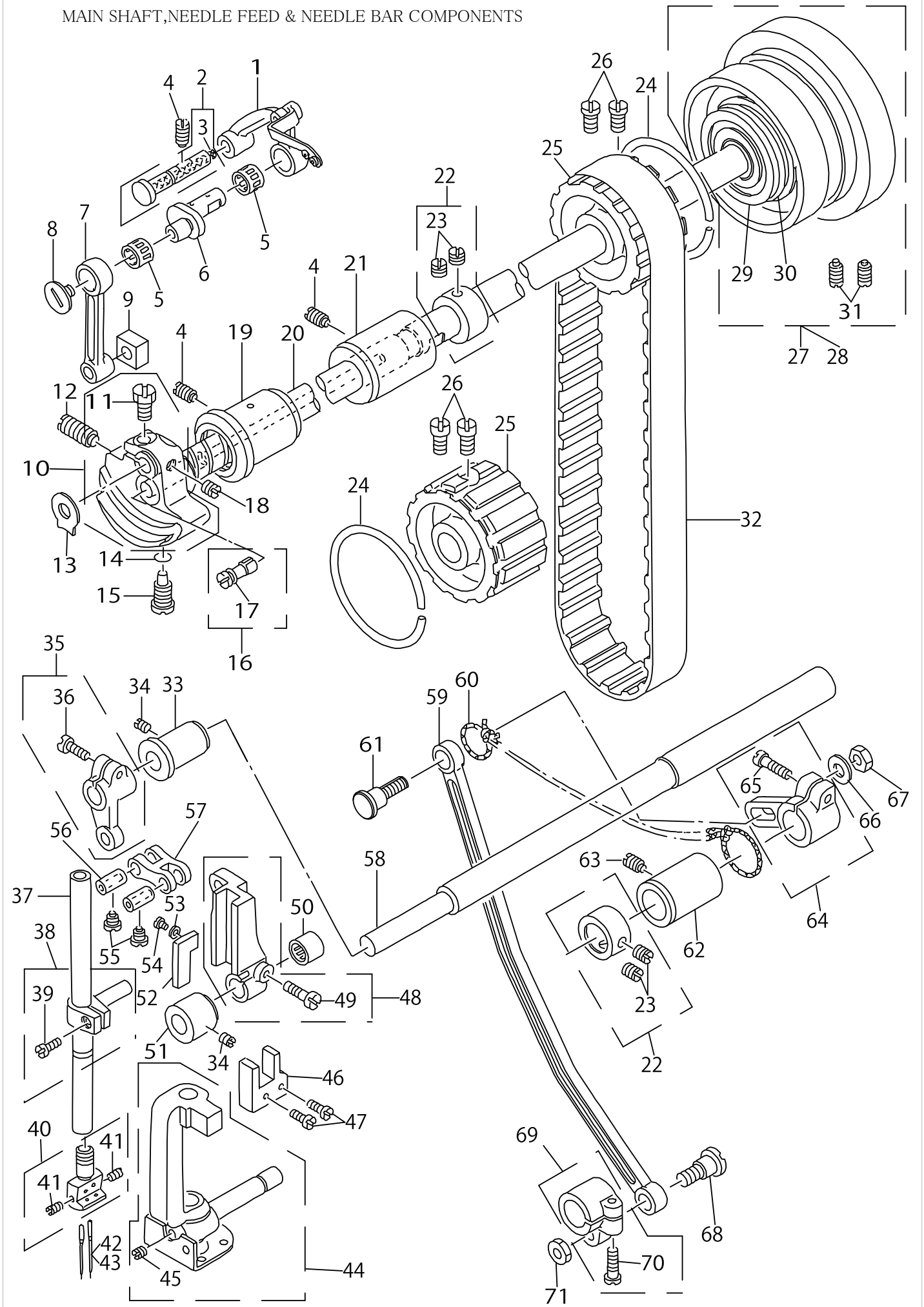

MAIN SHAFT,NEEDLE FEED & NEEDLE BAR COMPONENTS

No.	C-ons	Le-vel	Parts No.	Replacement	Supply Code	Parts name	Qty	R-ep. Q-TY	Status	Spec	Remarks
59			10122109			CONNECTING ROD	1				
60			CQ200000000			OIL WICK	.3				
61			10179208			CONNECTING PIN	1				
62			10106102			BUSHING	1				
63			SS8151150SP	SS8151150TP	Replaced	SCREW 15/64-28 L=10.5	1	1.00			
64			10121952			DRIVING ARM ASM.	1				
65		*	SS6121610TP			SCREW 3/16-28 L=15.5	1				
66			WP0740516SP			WASHER 7.4X11.8X0.5	1				
67			NS6680410SP			NUT 9/32-28	1				
68			SD0900701TP			HINGE SCREW D= 9 H= 7	1				
69			10122257			DRIVING ARM ASM.	1				
70		*	SS6121610TP			SCREW 3/16-28 L=15.5	1				
71			NS6680320SP			NUT 9/32-28	1				

HOOK & HOOK DRIVING SHAFT COMPONENTS

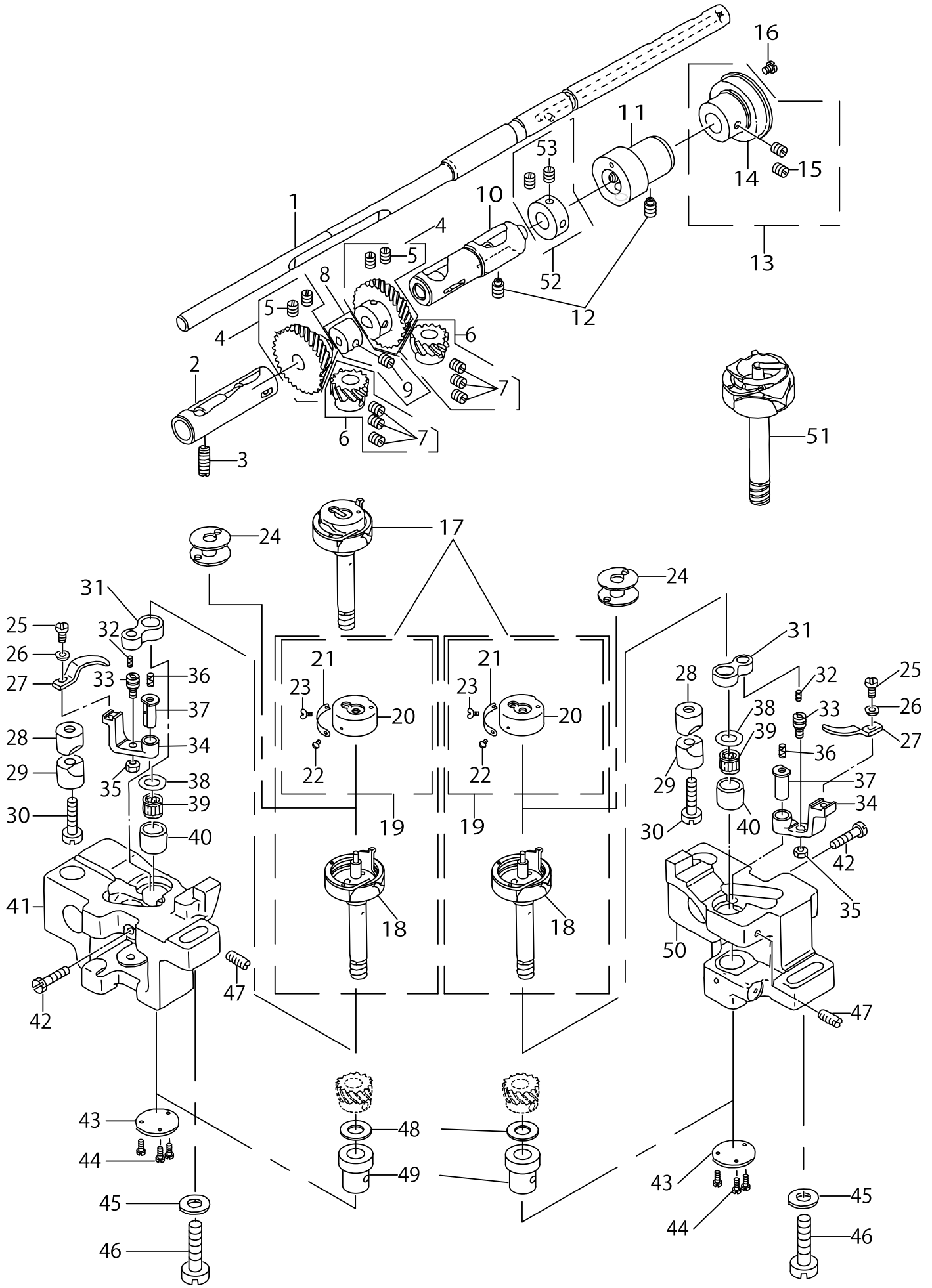

HOOK & HOOK DRIVING SHAFT COMPONENTS

No.	C-ons	Le-vel	Parts No.	Replacement	Supply Code	Parts name	Qty	R-ep. Q-TY	Status	Spec	Remarks
1			10108512			HOOK DRIVING SHAFT	1				
2			B18025120A0A			BUSHING ASM., FRONT	1				EXCHANGING C
3			SS8152030SP			SCREW 15/64-28 L=20	1				
4			B18165120A0			HOOK DRIVING SHAFT GE	2				
5		*	SS8660810TP			SCREW 1/4-40 L=8	4				
6			10112050			HOOK SHAFT GEAR ASM.,	2				SELECTIVE PAF
7		*	SS8660530TP			SCREW 1/4-40 L= 4.5	6				
8			B18405120A0		Disconinue	FEED DRIVING CAM ASM.	1				
9		*	SS8150510TP			SCREW 15/64-28 L= 4.7	1				
10			B18035150A0			BUSHING ASM., INTERMED	1				EXCHANGING C
11			10108611			PLUNGER BUSHING	1				
12			SS8151150SP	SS8151150TP	Replaced	SCREW 15/64-28 L=10.5	2	1.00			
13			10108751		Disconinue	THRUST COLLAR ASM.	1				
14		*	SB120000200			BEARING 20X42	1				
15		*	SS8660610TP			SCREW 1/4-40 L=6	2				
16			SS6110610TP			SCREW 11/64-40 L=6	1				
17			10110153			HOOK ASM.	2				
18		*	10110104			HOOK ASM.	2				
19		*	10110252			BOBBIN CASE ASM.	2				
20		*	10110203			BOBBIN CASE	2				
21		*	10110401			BOBBIN CASE TENSION SP	2				
22		*	10110500			TENSION SPRING INSTALL	2				
23		*	10110609			TENSION ADJUSTING SCRE	2				
24			B9117051000			BOBBIN	2				
25			SS6090810SP	SS6090810TP	Replaced	SCREW 9/64-40 L= 7.5	2	1.00			
26			WP0371016SD			WASHER 3.7X8X1	2				
27			10111805		Disconinue	BOBBIN CASE OPENING LE	2				
28			10109908			SADDLE INSTALLING BLO(	2				
29			10112407			SADDLE INSTALLING BLO(	2				
30			SS6153040SP			SCREW 15/64-28 L=30	2				
31			B1820563000			BOBBIN CASE OPENING LE	2				
32			CQ202000000			OIL WICK	.1				
33			B1821051000			CRANK SCREW STUD	2				
34			B1822051000			OPENING LEVER CRANK	2				
35			NS6110420SP			NUT 11/64-40	2				
36			CQ202000000			OIL WICK	.1				
37			B1823051000			OPENING LEVER CRANK P	2				
38			10109809			THRUST WASHER, B	2				SELECTIVE PAF
39			SB30953010C			NEEDLE BEARING 9.525X9.	2				SELECTIVE PAF
40			10109205		Disconinue	BUSHING	2				
41			10109007		Disconinue	HOOK SHAFT SADDLE, LE	1				
42			SS9111820SP			SCREW 11/64-40 L=18	2				
43			B1860512000		Disconinue	HOOK SHAFT SADDLE CO	2				
44			SS7060610SP			SCREW 3/32-56 L= 5.5	6				
45			WP0850002SP			WASHER 8.5X18X1.6	2				
46			SM7082550SP			SCREW M8 L=25	2				
47			SS8151550SP			SCREW 15/64-28 L=15	2				
48			B1818051B00			THRUST WASHER, B	2				
49			10179307			BUSHING, LOWER	2				
50			10109106			HOOK SHAFT SADDLE, RI(	1				
51			10197655			LATCH HOOK ASM.	1				FOR JE
52			CS1470710SH			THRUST COLLAR ASM. D=	1				
53		*	SS8110410TP			SCREW 11/64-40 L= 3.5	2				

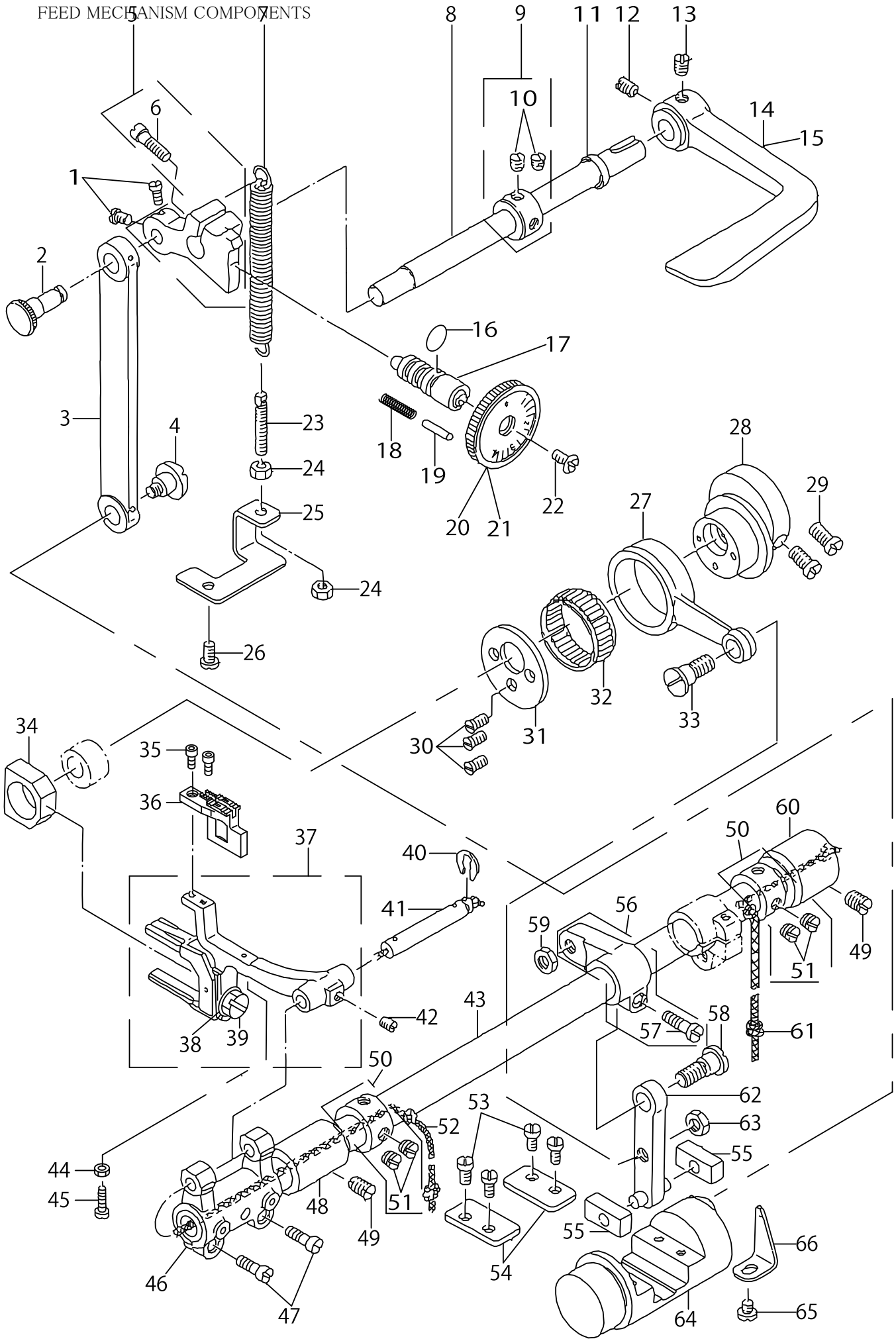
1
2
3
4
5
6
7
8
9
10
11
12
13
14
15
16
17
18
19
20
21
22
23
24
25
26
27
28
29
30
31
32
33
34
35
36
37
38
39
40
41
42
43
44
45
46
47
48
49
50
51
52
53
54
55
56
57
58
59
60
61
62
63
64
65
66

FEED MECHANISM COMPONENTS

No.	C-ons	Le-vel	Parts No.	Replacement	Supply Code	Parts name	Qty	R-ep. Q-TY	Status	Spec	Remarks
1			SS6110710TP			SCREW 11/64-40 L= 6.5	2				
2			10107001			ROD PIN	1				
3			10106904		Disconinue	FEED REGULATOR CONNE	1				
4			SD0900702TP		Disconinue	HINGE SCREW D=9 H=7	1				
5			10107159		Disconinue	FEED REGULATOR ASM.	1				
6		*	SS6121610TP			SCREW 3/16-28 L=15.5	1				
7			B1513280000			TENSION SPRING	1				
8			10107506			REVERSE FEED SHAFT	1				
9			CS102121ASH			THRUST COLLAR ASM. D=	1				
10		*	SS8660610TP			SCREW 1/4-40 L=6	2				
11			10108009			OIL SEAL	1				
12			SS8660810TP			SCREW 1/4-40 L=8	1				
13			SS8661040TP			SCREW 1/4-40 L=10	1				
14			B1624380000	B162438000A	Replaced	REVERSE FEED CONTROL	1	1.00			
15			B162438000A			REVERSE FEED CONTROL	1				FOR URBAN WI
16			RO074240100			RUBBER RING	1				
17			B1634470000			STITCH LENGTH REGULA	1				
18			22912109			FEED REGULATOR PIN SPI	1				
19			B1147555000			PIN	1				
20			B16234700A0			STITCH DIAL ASM.	1				REPLACE THIS
21			B16234700AA			STITCH DIAL ASM.	1				FOR URBAN WI
22			SS6121050SP			SCREW 3/16-28 L= 9.5	1				
23			B1649161000	26226506	Replaced	TENSION SPRING ADJUSTI	1	1.00			
24			NS6110420SP			NUT 11/64-40	2				
25			10107209		Disconinue	TENSION SPRING SUSPENS	1				
26			SS7110910SP	SS7110910TP	Replaced	SCREW 11/64-40 L=8.5	1	1.00			
27			10106300		Disconinue	FEED ROCKER SHAFT CO	1				
28			B1610484000		Disconinue	FEED DRIVE ECCENTRIC C	1				
29			SS6661110SP			SCREW 1/4-40 L=11	2				
30			SS2110930SP			SCREW 11/64-40 L=8.7	3				
31			B1637432000		Disconinue	THRUST COLLAR	1				
32			B1636581B00			NEEDLE BEARING B	1				SELECTIVE PAI
33			SD0900701TP			HINGE SCREW D= 9 H= 7	1				
34			B1610512000			FEED DRIVING SLIDE BLO	1				
35			SS6580752TP			SCREW 1/8-40 L=7	2				
36			B1613512D00		Disconinue	FEED DOG 3/16	1				EXCHANGING C
37			10107753			FEED BAR ASM.	1				
38		*	WP0621016SD			WASHER 6.2X13X1	1				
39		*	SS9151440CP			SCREW 15/64-28 L=14	1				
40			RE0500711KP			SNAP RING 5	1				
41			B1604012000A			FEED BAR SHAFT	1				
42			SM8050502TP			SCREW M5 L=5	1				
43			10106003			FEED ROCK SHAFT	1				
44			NS6080210SP			NUT 1/8-44	1				
45			SS6081810SP			SCREW 1/8-44 L=18.0	1				
46			B1603512000	21364104	Replaced	FEED ROCKER	1	1.00			
47			SS7111310TP			SCREW 11/64-40 L=12.8	2				
48			10106102			BUSHING	1				
49			SS8681130SP			SCREW 9/32-28 L=11	2				
50			22904155			MAIN SHAFT THRUST COL	2				
51		*	SS8660610TP			SCREW 1/4-40 L=6	4				
52			CQ252000000			OIL WICK	.4				
53			SS7110910SP	SS7110910TP	Replaced	SCREW 11/64-40 L=8.5	4	1.00			
54			10106805		Disconinue	PLATE	2				
55			B1652470000			FEED DRIVING ROCKER BI	2				
56			10106557			FEED ROCKER SHAFT CRA	1				
57		*	SS6121610TP			SCREW 3/16-28 L=15.5	1				
58			SD0900701TP			HINGE SCREW D= 9 H= 7	1				
59			NS6680410SP			NUT 9/32-28	1				
60			10106201		Disconinue	BUSHING	1				

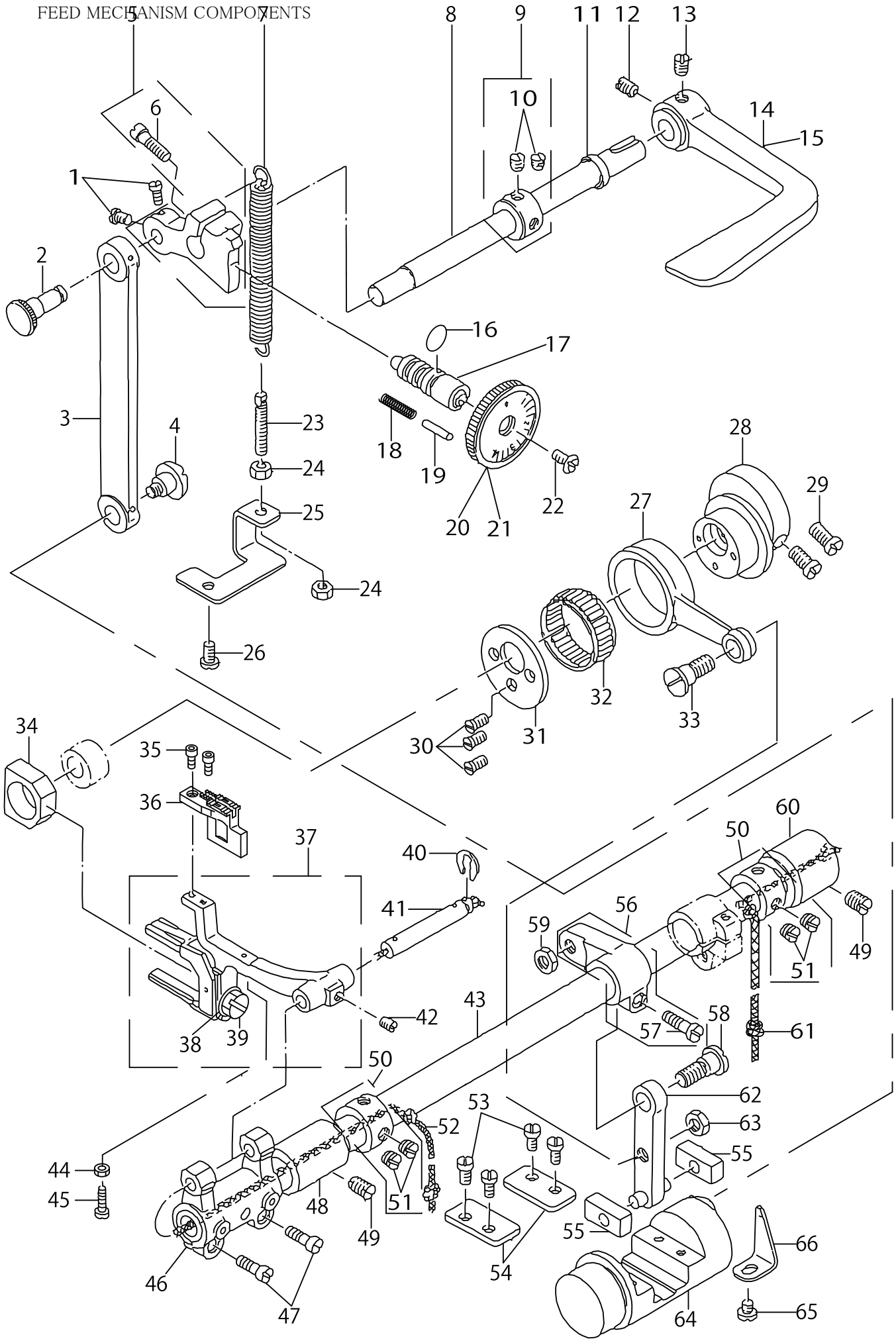
1
2
3
4
5
6
7
8
9
10
11
12
13
14
15
16
17
18
19
20
21
22
23
24
25
26
27
28
29
30
31
32
33
34
35
36
37
38
39
40
41
42
43
44
45
46
47
48
49
50
51
52
53
54
55
56
57
58
59
60
61
62
63
64
65
66

FEED MECHANISM COMPONENTS

No.	C-ons	Le-vel	Parts No.	Replacement	Supply Code	Parts name	Qty	R-ep. Q-TY	Status	Spec	Remarks
61			CQ303000000			OIL WICK	.3				
62			10106458			FEED ROCK CONNCTING I	1				
63			NS6680410SP			NUT 9/32-28	1				
64			10106656			FEED DRIVING ROCKER A\	1				
65			SS7110510SP			SCREW 11/64-40 L=5	1				
66			B1633470000			STOPPER PLATE	1				

PRESSER BAR & TENSION RELEASE COMPONENTS(FOR LH-2178-7)

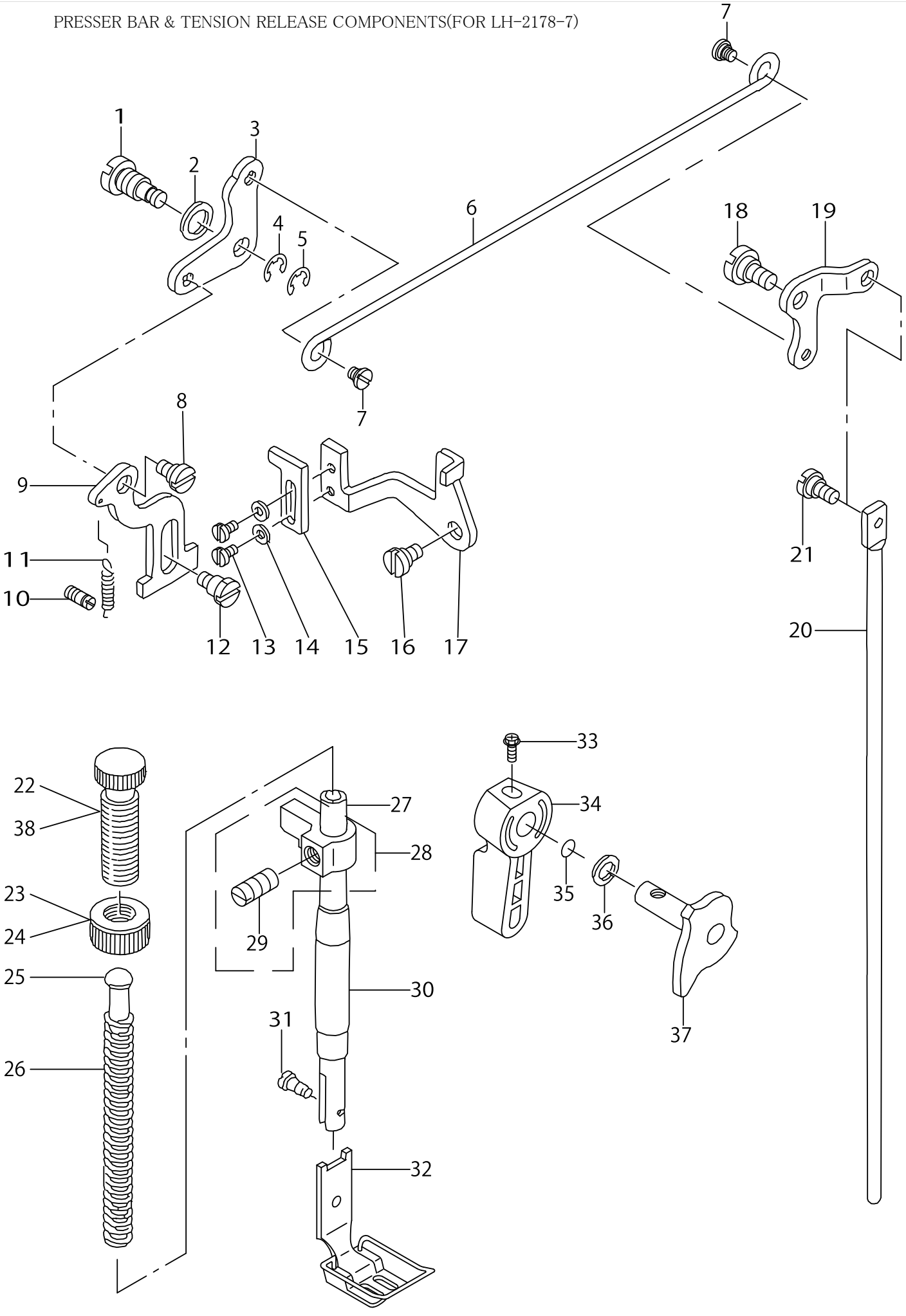

PRESSER BAR & TENSION RELEASE COMPONENTS(FOR LH-2178-7)

No.	C-ons	Le-vel	Parts No.	Replacement	Supply Code	Parts name	Qty	R-ep. Q-TY	Status	Spec	Remarks
1			B1517415000		Disconinue	HINGE PIN	1				
2			B3431581000			LIFTING LEVER GASKET	1				
3			10105609			LIFTING LEVER LINK, LEF	1				
4			RE0600000K0			E-RING 6	1				
5			B1523226000			SNAP RING	1				
6			10125003		Disconinue	LIFTING LEVER CONNECT	1				
7			11007101	22908909	Replaced	HINGE SCREW	2	1.00			
8			SD0630301SP			HINGE SCREW D=6.35 H=3	1				
9			B1515415000		Disconinue	LIFTING LEVER	1				
10			B1531415000			SUSPENSION	1				
11			B1522180000			SPRING	1				
12			SD0630275SP			HINGE SCREW D= 6.35 H=	1				
13			SS7080520SP			SCREW 1/8-44 L=4.9	2				
14			WP0330500MB			WASHER 3.3X6X0.5	2				
15			B3135415000			TENSION RELEASE LINK, E	1				
16			SD0640231SP			HINGE SCREW D= 6.35 H=	1				
17			10123305		Disconinue	TENSION RELEASE LINK, A	1				
18			SD0720331SP			HINGE SCREW D= 7.24 H=	1				
19			10125102		Disconinue	LIFTING LEVER LINK, RIGI	1				
20			10125201			CONNECTING ROD, VERTI	1				
21			SD0600322SD			HINGE SCREW D=6 H=3.2	1				
22			B1509555000	40011951	Replaced	PRESSER SPRING REGULAT	1	1.00			
23			B1511555000	40012052	Replaced	NUT	1	1.00			
24			11071701	22907554	Replaced	NUT	1	1.00			FOR URBAN WI
25			22907703			PRESSER GUIDE BAR	1				
26			22907406			PRESSER SPRING	1				REPLACE THIS
27			B1501581000			PRESSER BAR	1				
28			10178754			PRESSER BAR BUSHING LC	1				
29		*	SS8660610TP			SCREW 1/4-40 L=6	1				
30			22907109			PRESSER BAR BUSHING, L(	1				
31			SS7090910TP			SCREW 9/64-40 L= 8.5	1				
32			10152759			PRESSER FOOT ASM. 3/16	1				EXCHANGING (
33			B1521555000			SCREW	1				
34			11071800	22907802	Replaced	HAND LIFTER	1	1.00			
35			RO037180100			RUBBER RING	1				
36			WP0740516SP			WASHER 7.4X11.8X0.5	1				
37			10105575			HAND LIFTER CAM ASM.	1				
38			11071602	22907554	Replaced	PRESSER SPRING REGULAT	1	1.00			FOR URBAN WI

(1)EXCLUSIVE PARTS FOR STITCH SPECIFICATION"A"
縫仕様"A"専用部品

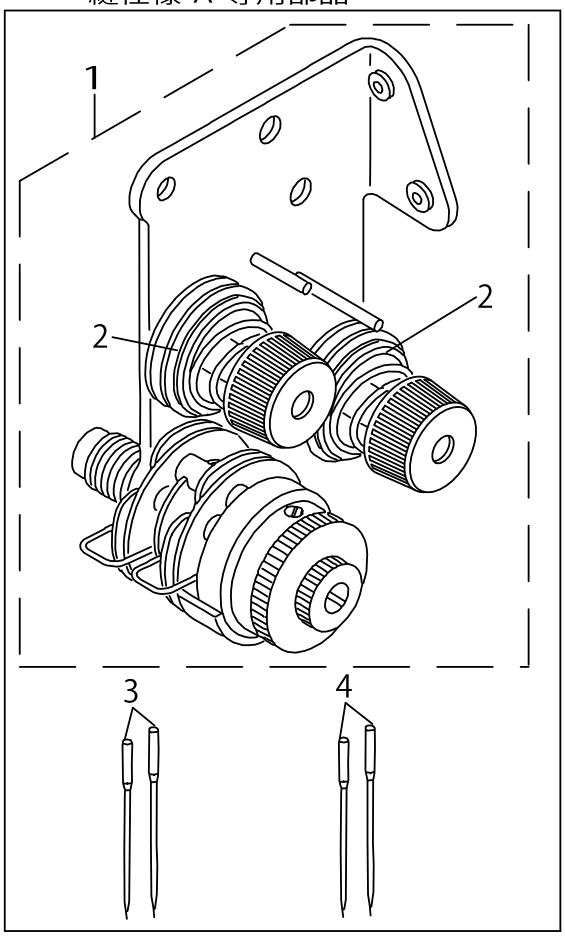

(2)EXCLUSIVE PARTS FOR STITCH SPECIFICATION"G"
縫仕様"G"専用部品

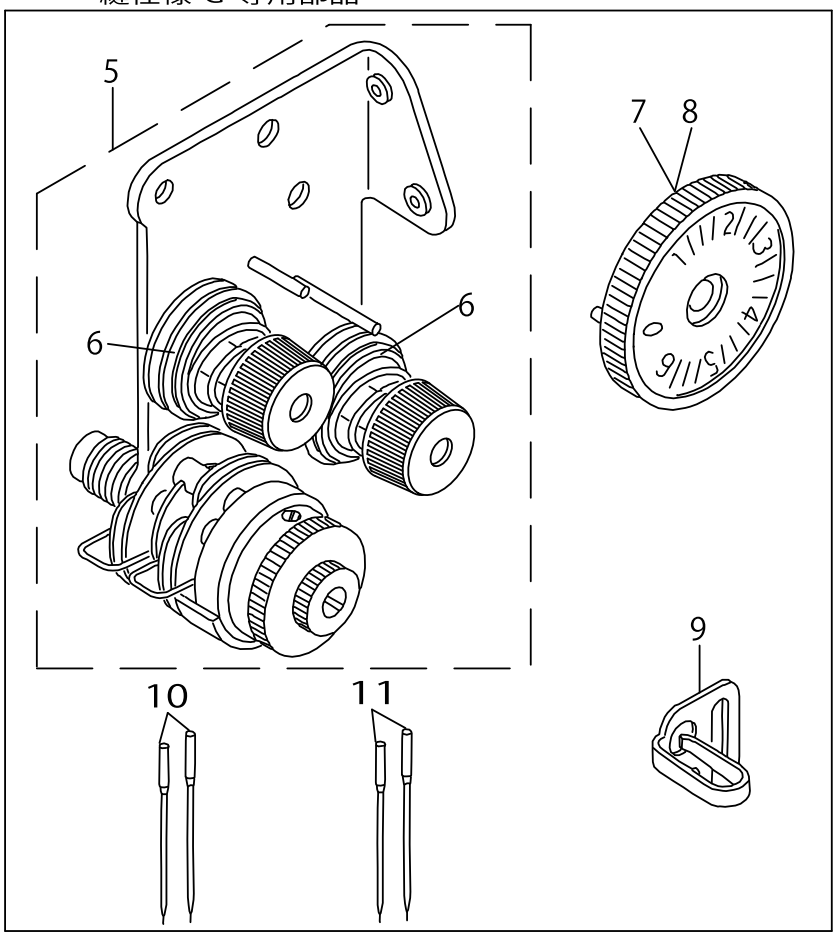

EXCLUSIVE PARTS BY STITCH SPECIFICATION (1)

No.	C-ons	Le-vel	Parts No.	Replacement	Supply Code	Parts name	Qty	R-ep. Q-TY	Status	Spec	Remarks
1			10124758		Disconinue	TENSION POST BASE ASM.	1				
2		*	D3129555D00			THREAD TENSION SPRING	2				
3			MSG19060900		Disconinue	NEEDLE SGX1906 #9	2				EXCEPT JE
4			MC200500650			NEEDLE 134 NM65	2				FOR JE
5			10124774			TENSION POST BASE ASM.	1				
6		*	B3129526000			TENSION SPRING (1.2)	2				
7			10107357		Disconinue	STITCH DIAL ASM.	1				
8			10161156			STITCH DIAL ASM.	1				FOR URBAN WH
9			10188001		Disconinue	THREAD GUIDE, B	1				
10			MDP500B2100			NEEDLE DPX5 #21	2				EXCEPT JE
11			MC200501300			NEEDLE 134 NM130	2				FOR JE

(3)EXCLUSIVE PARTS FOR STITCH SPECIFICATION"F"

縫仕様"Ｆ"専用部品

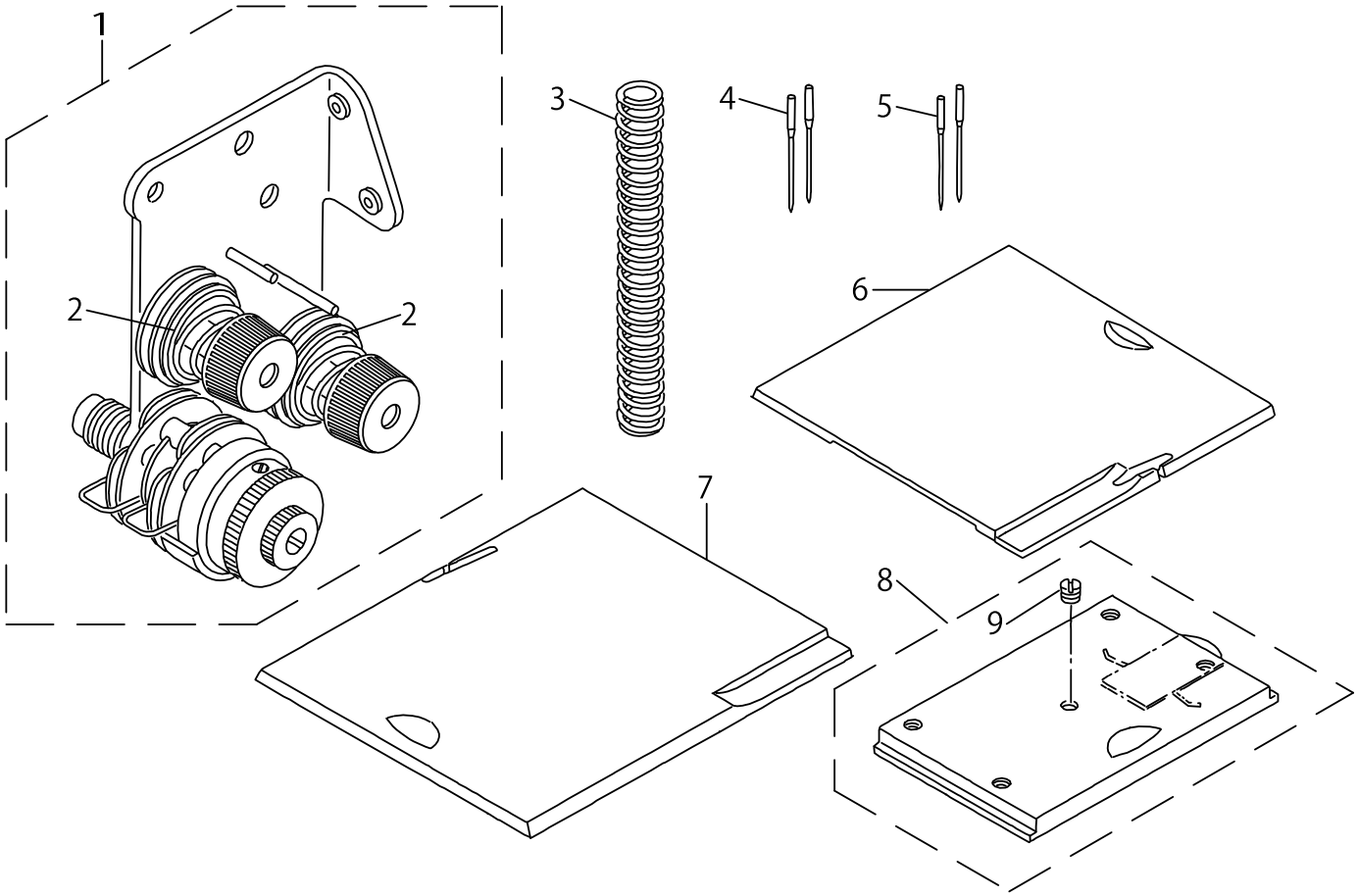

EXCLUSIVE PARTS BY STITCH SPECIFICATION (2)

No.	C-ons	Le-vel	Parts No.	Replacement	Supply Code	Parts name	Qty	R-ep. Q-TY	Status	Spec	Remarks
1			10124758		Disconinue	TENSION POST BASE ASM.	1				
2		*	D3129555D00			THREAD TENSION SPRING	2				
3			B1505227T00A			PRESSER SPRING T	1				
4			MSG19650900		Disconinue	NEEDLE SGX1965 #9	2				EXCEPT JE
5			MC200500650			NEEDLE 134 NM65	2				FOR JE
6			10185205			BED SLIDE, RIGHT	1				FOR A,B TYPES
7			10185106			BED SLIDE, LEFT	1				FOR A,B TYPES
8			10185056			BED SLIDE ASM.	1				FOR A,B TYPES
9		*	SS8110320SP			SCREW 11/64-40 L= 3.2	1				FOR A,B TYPES

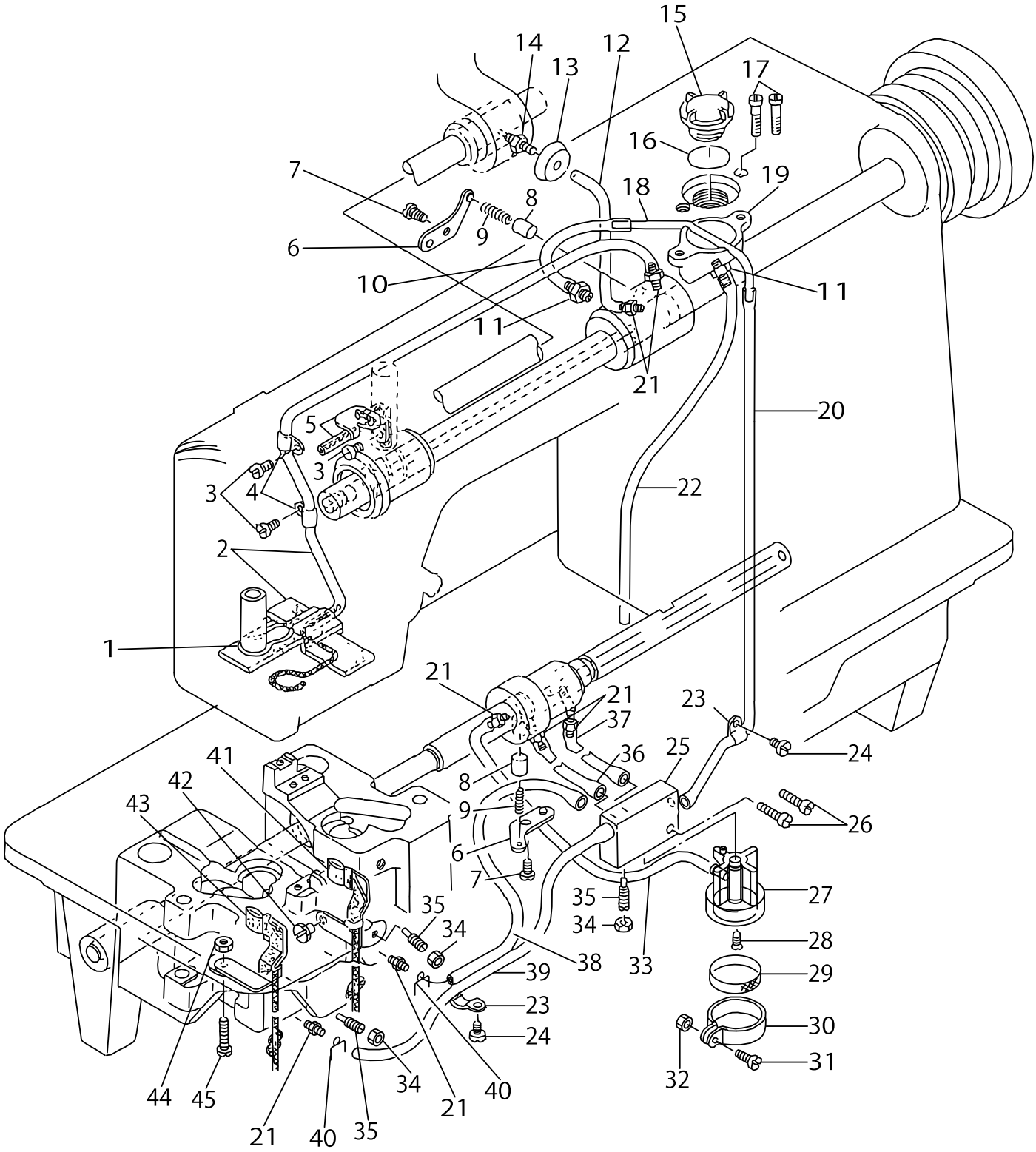
15
14
12
13
17
16
19
18
7
8
9
6
10
11
11
21
20
5
3
3
4
22
2
1
21
21
37
23
24
41
42
43
36
25
8
9
26
6
7
35
27
35
34
28
34
38
33
39
29
23
30
24
31
32
44
45
34
40
21
21
40
35

LUBRICATION COMPONENTS

No.	C-ons	Le-vel	Parts No.	Replacement	Supply Code	Parts name	Qty	R-ep. Q-TY	Status	Spec	Remarks
1			22925101			OIL FELT PRESSER	1				
2			10125755			OIL RETURN FELT ASM.	1				
3			SS7110710SP			SCREW 11/64-40 L=7	3				
4			B3538112000			OIL RETURN TUBE HOLDE	2				
5			10125557			OIL WICK HOLDER ASM.	1				
6			B3524552000			PLUNGER THRUST PLATE	2				
7			SS7110710SP			SCREW 11/64-40 L=7	2				
8			B3534155000			PLUNGER	2				
9			B1214038000			PLUNGER SPRING	2				
10			BP300000000			VINYL PIPE	.1				
11			SQ1150451MZ			CONNECTING SCREW	2				
12			BP300000000			VINYL PIPE	.1				
13			10127009		Disconinue	CONNECTING SCREW CAP	1				
14			10126902		Disconinue	OIL PIPE CONNECTING SC	1				
15			B3530555000	22924708	Replaced	OIL SIGHT WINDOW	1	1.00			
16			RO195240100			RUBBER RING	1				
17			SS7111810SP	SS7111810TP	Replaced	SCREW 11/64-40 L=18	2	1.00			
18			10126001			OIL TUBE	1				
19			10125904	26304600	Replaced	OIL TANK	1	1.00			
20			BP300000000			VINYL PIPE	.4				
21			SQ1110401MZ			CONNECTING SCREW	7				
22			BP300000000			VINYL PIPE	.3				
23			B3538112000			OIL RETURN TUBE HOLDE	2				
24			SS7110710SP			SCREW 11/64-40 L=7	2				
25			10623403			BASE	1				
26			SS6111610SP			SCREW 11/64-40 L=16	2				
27			22619001		Disconinue	SUCTION	1				
28			SS2110930SP			SCREW 11/64-40 L=8.7	1				
29			B1851512000			FILTER SCREEN	1				
30			B1850512000	40009379	Replaced	BUSHING HOLDER	1	1.00			
31			SS7090910SP	SS7090910TP	Replaced	SCREW 9/64-40 L= 8.5	1	1.00			
32			NS6090310SP			NUT 9/64-40	1				
33			BP300000000			VINYL PIPE	.2				
34			NS6110420SP			NUT 11/64-40	3				
35			B1834512000A			OIL ADJUSTING SCREW	3				
36			BP300000000			VINYL PIPE	.1				
37			BP300000000			VINYL PIPE	.1				
38			BP300000000			VINYL PIPE	.3				
39			BP300000000			VINYL PIPE	.3				
40			10126803			OIL TUBE HOLDER	2				
41			10126654		Disconinue	OIL WICK HOLDER ASM.	1				
42			SS7110340SP			SCREW 11/64-40 L= 3.2	1				
43			10126555		Disconinue	OIL WICK HOLDER ASM.	1				
44			NS6110310SP			NUT 11/64-40	1				
45			SS7111410SP	SS7111410TP	Replaced	SCREW 11/64-40 L=14	1	1.00			

OIL RESERVOIR & KNEE LIFTER COMPONENTS

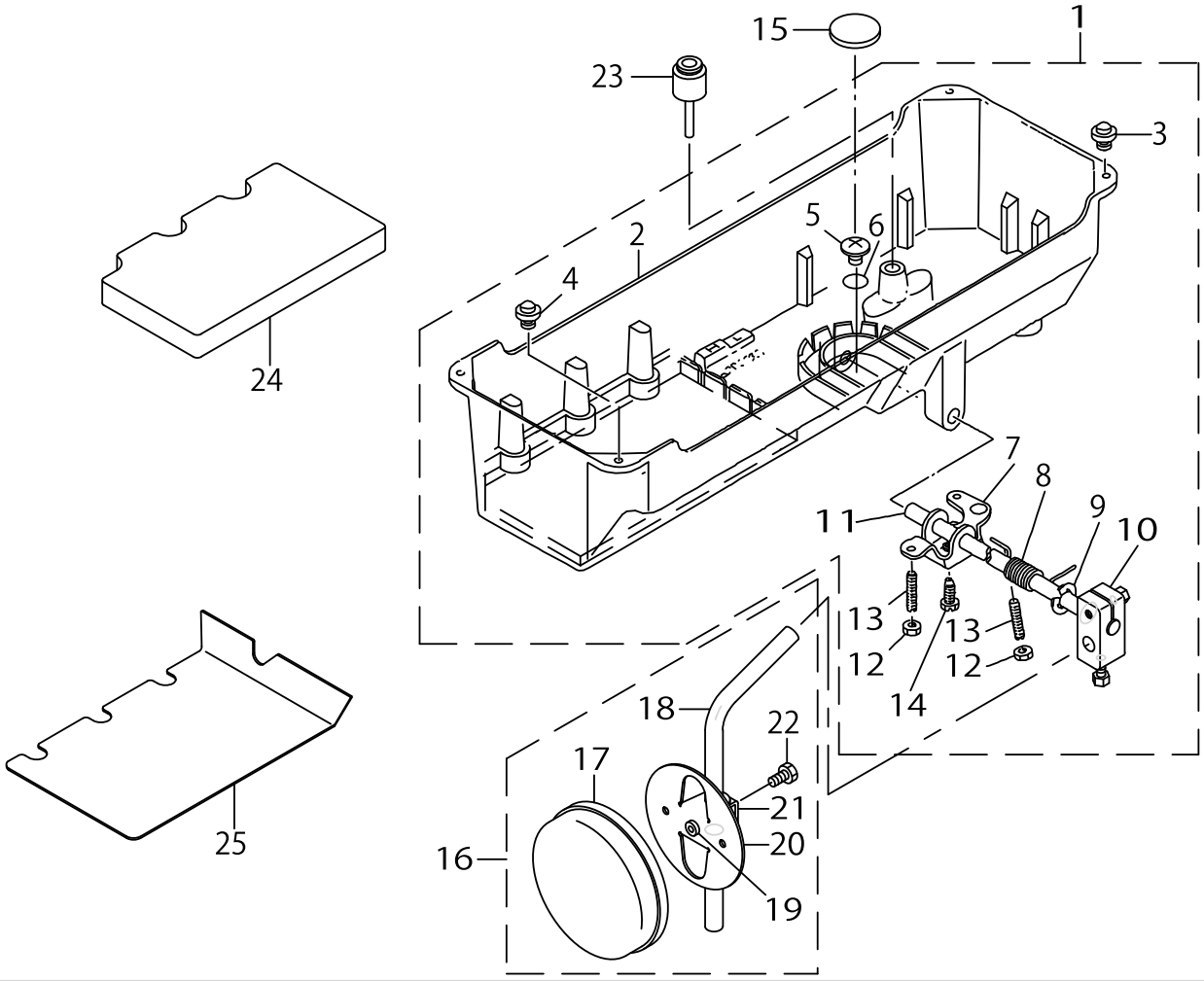

OIL RESERVOIR & KNEE LIFTER COMPONENTS

No.	C-ons	Le-vel	Parts No.	Replacement	Supply Code	Parts name	Qty	R-ep. Q-TY	Status	Spec	Remarks
1			10162253			OIL RESERVOIR ASM.	1				
2		*	10162204	10162253	Replaced	OIL RESERVOIR	1	1.00			
3		*	10162600			RUBBER CUSHION	2				
4		*	11047107			RUBBER CUSHION	2				
5		*	SM0081001SD			SCREW	1				
6		*	RO098240100			RUBBER RING	1				
7		*	11024015	22932156	Replaced	CONNECTING ROT, VERTI	1	1.00			
8		*	11024106	22932206	Replaced	SPRING	1	1.00			
9		*	RE1000000K0			E-RING 10	1				
10		*	22932453			BRACKET ASM.	1				
11		*	11024205	22932305	Replaced	KNEE PRESS ROD	1	1.00			
12		*	NM6060001SE			NUT M6	2				
13		*	SM8063012TR			SCREW M6 L=30	2				
14		*	SM9061853SR			SCREW M6 L=17.5	1				
15			B8228125000			OIL RESERVOIR MAGNET	1				
16			22934251			KNEE PAD PLATE ASM.	1				
17		*	22934509			KNEE PAD PLATE COVER	1				
18		*	22934608			KNEE PAD UPRIGHT SHAF	1				
19		*	22934400			KNEE PAD PLATE RUBBER	1				
20		*	22934202			KNEE PAD PLATE	1				
21		*	22934301			KNEE PAD PLATE SUPPOR	1				
22		*	SM9061203SE			SCREW M6 L=12	1				
23			11024304	22931703	Replaced	KNEE PRESS LIFTER ROD	1	1.00			
24			10162501			OIL RESERVOIR SPACER, A	1				
25			10162402			DUST COVER	1				FOR JE

THREAD TENSION CONTROLLER COMPONENTS

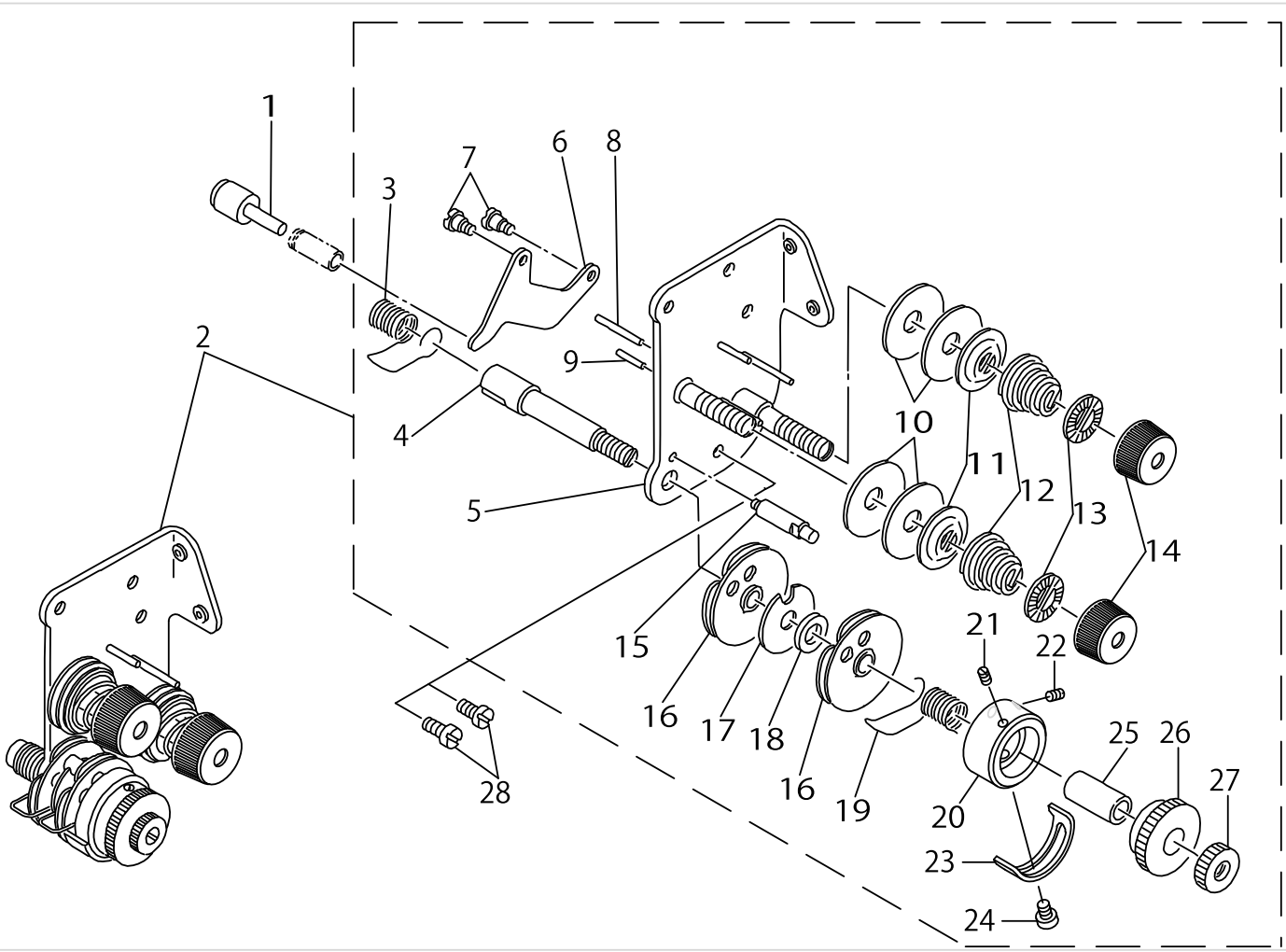

THREAD TENSION CONTROLLER COMPONENTS

No.	C-ons	Le-vel	Parts No.	Replacement	Supply Code	Parts name	Qty	R-ep. Q-TY	Status	Spec	Remarks
1			10123453			KNEE PRESS LIFTER ROD /	1				
2		*	10124766		Disconinue	TENSION POST BASE ASM.	1				EXCHANGING E
3		*	B3128051000			THREAD TAKE-UP SPRING	1				
4		*	10124501			THREAD TAKE-UP SPRING	1				
5		*	10124055			TENSION POST ASM.	1				
6		*	B3134521000			TENSION RELEASE LEVER	1				
7		*	SD0470281SP			HINGE SCREW D=4.7 H=2.5	2				
8		*	B3127527000			PIN B	1				
9		*	B3127051000			TENSION RELEASE PIN, SH	1				
10		*	B3126051000			TENSION DISC	4				
11		*	B3132051000			TENSION DISC HOLDER	2				
12		*	B3129012A00			TENSION SPRING	2				EXCHANGING E
13		*	B3120125000			ROTATING STOPPER	2				
14		*	11072204			TENSION NUT	2				
15		*	B3143527000			TAKE-UP SPRING GUIDE S	1				
16		*	B31375270A0			TAKE-UP SPRING GUIDE A	2				
17		*	B3142527000			TAKE-UP SPRING GUIDE P	1				
18		*	B3139527000			COLLAR	1				
19		*	B3128527000			THREAD TAKE-UP SPRING	1				
20		*	22617609			THREAD TENSION POST	1				
21		*	22618904	SM8030500SP	Replaced	SET SCREW	1	1.00			
22		*	22618904	SM8030500SP	Replaced	SET SCREW	1	1.00			
23		*	B3138527000			ADJUSTING PLATE B	1				
24		*	SS7090520SP	SS7090520TP	Replaced	SCREW 9/64-40 L= 4.5	1	1.00			
25		*	B3141527000			PRESSER COLLAR	1				
26		*	B3125527000			TAKE-UP SPRING GUIDE	1				
27		*	B3125012000	22928808	Replaced	THREAD TENSION NUT	1	1.00			
28			SS7110710SP			SCREW 11/64-40 L=7	2				

BELT COVER & BOBBIN WINDER COMPONENTS

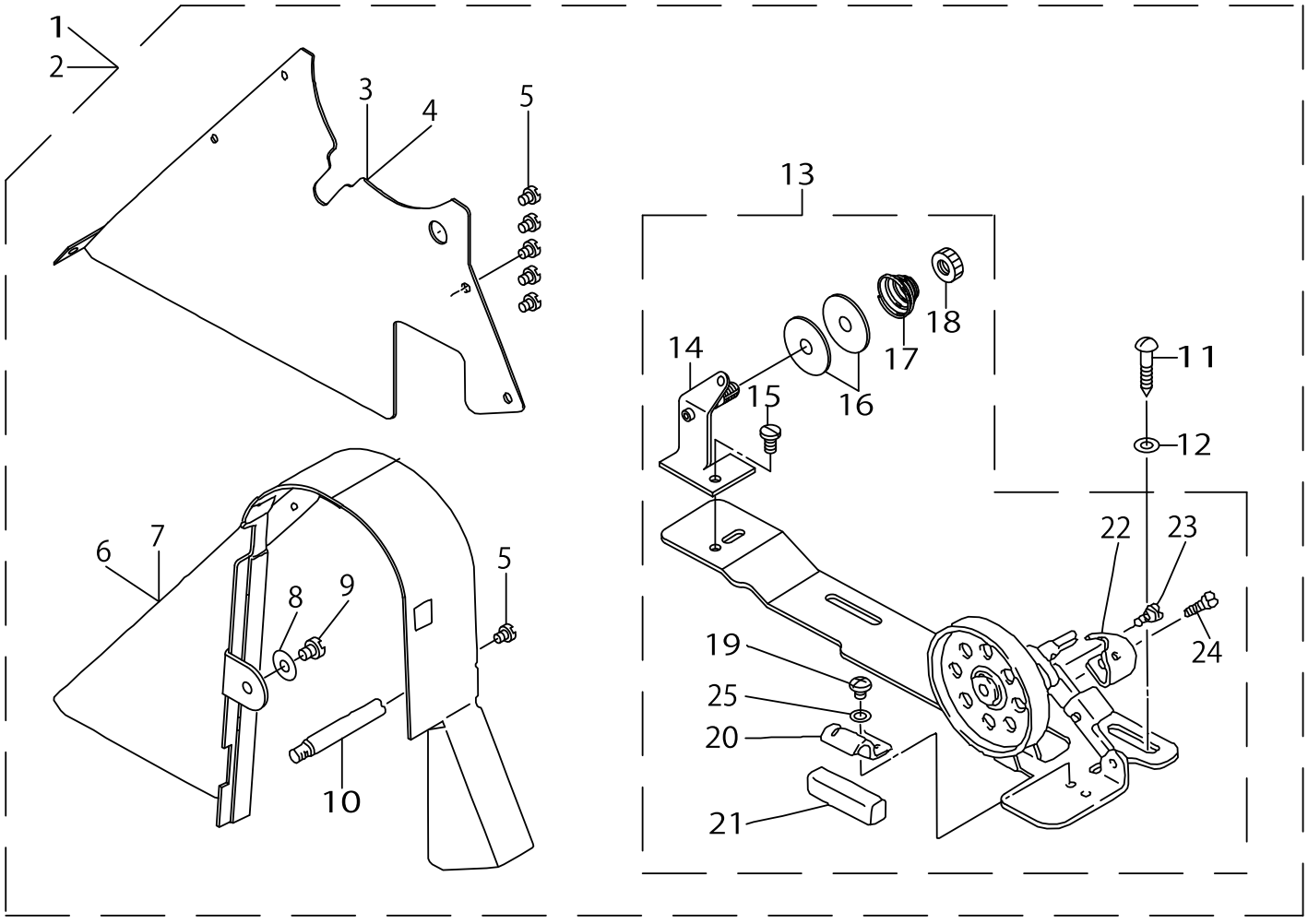

BELT COVER & BOBBIN WINDER COMPONENTS

No.	C-ons	Le-vel	Parts No.	Replacement	Supply Code	Parts name	Qty	R-ep. Q-TY	Status	Spec	Remarks
1			10128056	10161552	Replaced	BELT COVER ASM.	1	1.00			
2			10161552		Disconinue	BELT COVER ASM.	1				FOR URBAN WI
3		*	10128106	10218006	Replaced	BELT COVER PLATE	1	1.00			
4		*	10419307			BELT COVER PLATE	1				FOR URBAN WI
5		*	SS7110510SP			SCREW 11/64-40 L=5	6				
6		*	10128007			BELT COVER	1				
7		*	10958759			BELT COVER	1				FOR URBAN WI
8		*	WP0621016SD			WASHER 6.2X13X1	1				
9		*	SS7150740SP			SCREW 15/64-28 L=7	1				
10		*	10039105	40101337	Replaced	BELT COVER SUPPORT ST	1	1.00			
11		*	SK3482500SC	SK3482501SE	Replaced	WOOD SCREW D=4.8 L=25	2	1.00			
12		*	WP0501016SC			WASHER 5X10.5X1	2				
13		*	11077567	22927354	Replaced	BOBBIN WINDER COMPL.	1	1.00			
14		*	11078250			THREAD TENSION BRACKI	1				
15		*	SS7110840SP			SCREW 11/64-40 L=7.8	1				
16		*	B3126012000	22921506	Replaced	THREAD TENSION DISK	2	1.00			
17		*	B3129012B00	22929004	Replaced	THREAD TENSION SPRING	1	1.00			
18		*	B3125012000	22928808	Replaced	THREAD TENSION NUT	1	1.00			
19		*	SS4110515SP			SCREW 11/64-40 L=5	1				
20		*	11078102			PRESSER PLATE	1				
21		*	B3211555000		Disconinue	RUBBER BRAKE	1				
22		*	11078003			POSITIONING FINGER	1				
23		*	SD0490261SP			HINGE SCREW D=4.9 H=2.(	1				
24		*	SS7081310SP			SCREW 1/8-44 L=12.5	1				
25		*	WP0480856SP			WASHER 4.8X8.4X0.8	1				

BELT COVER & BOBBIN WINDER COMPONENTS (SPECIAL PARTS)

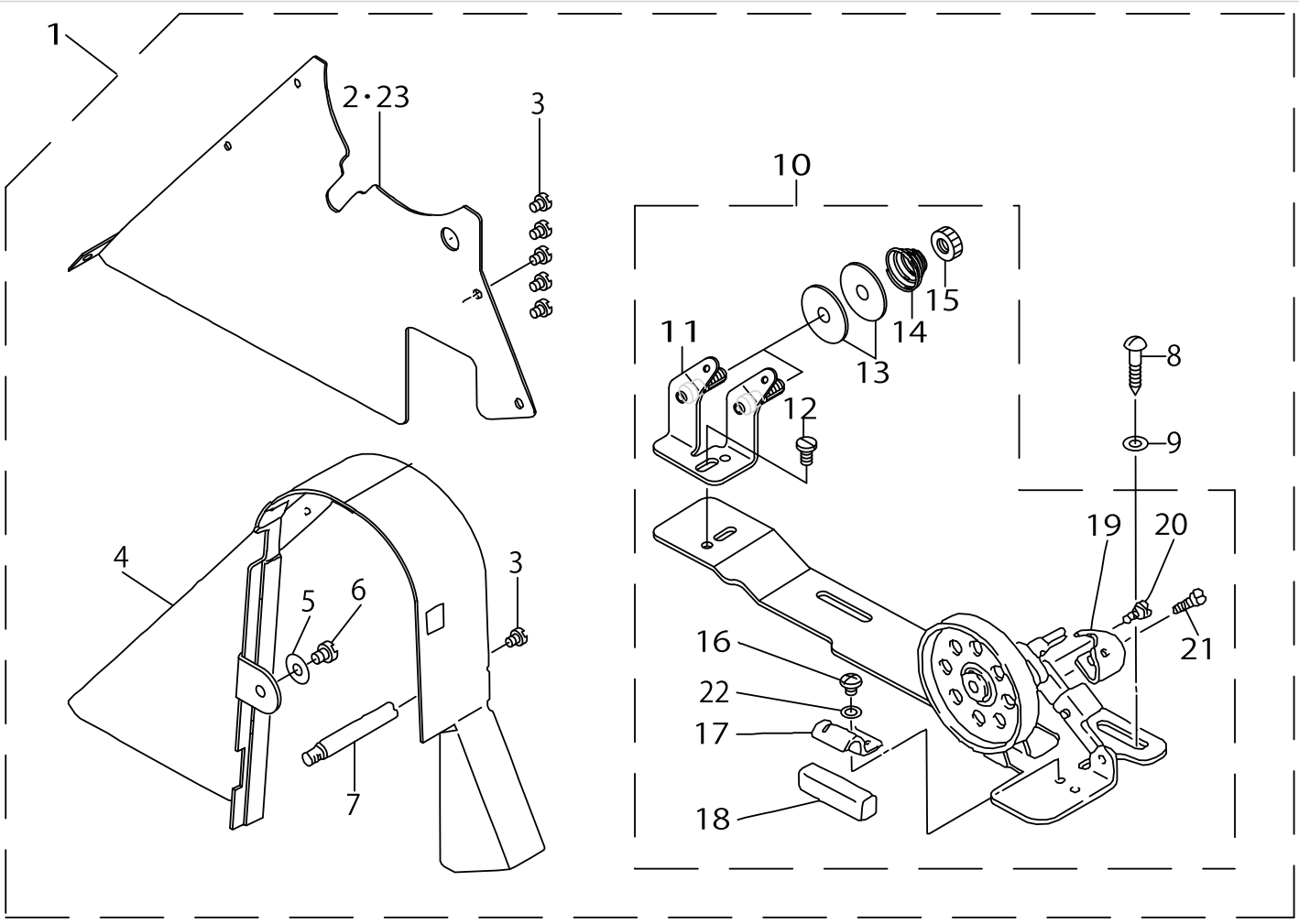

BELT COVER & BOBBIN WINDER COMPONENTS (SPECIAL PARTS)

No.	C-ons	Le-vel	Parts No.	Replacement	Supply Code	Parts name	Qty	R-ep. Q-TY	Status	Spec	Remarks
1			10128064			BELT COVER ASM.	1				
2		*	10128106	10218006	Replaced	BELT COVER PLATE	1	1.00			
3		*	SS7110510SP			SCREW 11/64-40 L=5	6				
4		*	10128007			BELT COVER	1				
5		*	WP0621016SD			WASHER 6.2X13X1	1				
6		*	SS7150740SP			SCREW 15/64-28 L=7	1				
7		*	10039105	40101337	Replaced	BELT COVER SUPPORT ST	1	1.00			
8		*	SK3482500SC	SK3482501SE	Replaced	WOOD SCREW D=4.8 L=25	2	1.00			
9		*	WP0501016SC			WASHER 5X10.5X1	2				
10		*	22621155			THREAD WINDER ASM.	1				
11		*	22621056			TENSION BAR BASE	1				
12		*	SS7110840SP			SCREW 11/64-40 L=7.8	1				
13		*	B3126012000	22921506	Replaced	THREAD TENSION DISK	4	1.00			
14		*	B3129012B00	22929004	Replaced	THREAD TENSION SPRING	2	1.00			
15		*	B3125012000	22928808	Replaced	THREAD TENSION NUT	2	1.00			
16		*	SS4110515SP			SCREW 11/64-40 L=5	1				
17		*	11078102			PRESSER PLATE	1				
18		*	B3211555000		Disconinue	RUBBER BRAKE	1				
19		*	22621106			BOBBIN PRESSER	1				
20		*	SD0490261SP			HINGE SCREW D=4.9 H=2.(	1				
21		*	SS7081310SP			SCREW 1/8-44 L=12.5	1				
22		*	WP0480856SP			WASHER 4.8X8.4X0.8	1				
23		*	10419307			BELT COVER PLATE	1				FOR URBAN WI

THREAD STAND COMPONENTS

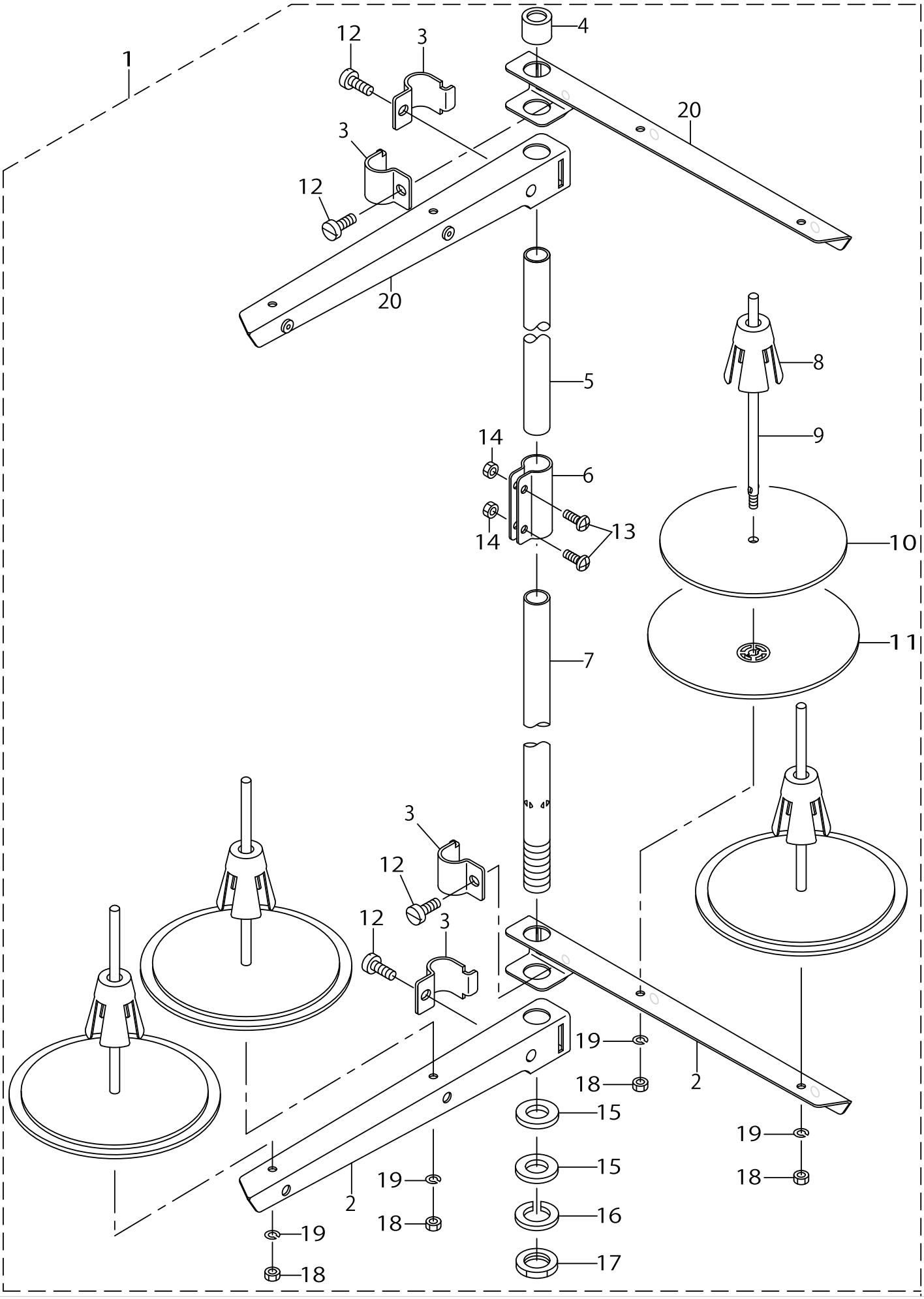

THREAD STAND COMPONENTS

No.	C-ons	Le-vel	Parts No.	Replacement	Supply Code	Parts name	Qty	R-ep. Q-TY	Status	Spec	Remarks
1			26910158			THREAD STANDING DEVIC	1				
2		*	22930507	22930358	Replaced	SPOOL REST ARM	2	1.00			
3		*	22930705	22930358	Replaced	THREAD GUIDE ARM JOIN'	4	1.00			
4		*	22931406			SPOOL REST ROD RUBBER	1				
5		*	22930408	22930358	Replaced	SPOOL REST ROD, UPPER	1	1.00			
6		*	22931307	22930358	Replaced	SPOOL REST ROD JOINT	1	1.00			
7		*	22930309	22930358	Replaced	SPOOL REST ROD, LOWER	1	1.00			
8		*	22931109	40085791	Replaced	SPOOL RETAINER	4	1.00			
9		*	22931000	40085790	Replaced	SPOOL PIN	4	1.00			
10		*	22930903			SPOOL REST CUSHION	4				
11		*	22930804			SPOOL REST	4				
12		*	SM6061610SC			SCREW M6 L=16	4				
13		*	SM4051405SE			SCREW M5 L=14	2				
14		*	NM6050001SE			NUT M5	2				
15		*	WP1612616SE			WASHER 16X30X2.6	2				
16		*	WS1643202KR			SPRING WASHER	1				
17		*	NM6160511SE			NUT M16X1.5	1				
18		*	NM6050001SE			NUT M5	4				
19		*	WS0510002KN			SPRING WASHER	4				
20		*	22930556	22930358	Replaced	THREAD STANDING ARM A	2	1.00			

Stitch spec. 縫仕様											
	S			★		☆		☆			
	A	★									
	G			☆		★		☆			
Needle gauge size 針幅		Presser Foot asm. 押え(組)									
Code ゲージ記号	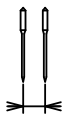	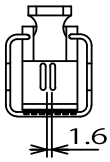 1.6		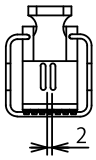 2		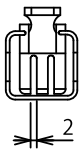 2		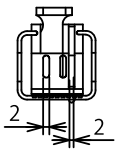 2 2			
	inch	mm	Ref.No.	Part No.	Ref.No.	Part No.	Ref.No.	Part No.	Ref.No.	Part No.	
▲♦ A	3/32	2.4	1	101-50050							
♦ B	1/8	3.2	2	101-50159		*					
♦ C	5/32	4.0	3	101-50258	20	101-52650		*		*	
D	3/16	4.8	4	101-50357	21	101-52759	37	101-56651			
E	7/32	5.6	5	101-50456	22	101-52858		*			
F	1/4	6.4	6	101-50555	23	101-52957	38	101-56552	50	101-55059	
G	9/32	7.1	7	101-50654	24	101-53054		*		*	
H	5/16	7.9	8	101-50753	25	101-53153	39	101-56750	51	101-55158	
K	3/8	9.5	9	101-50852	26	101-53252	40	101-56859			
W	7/16	11.1	10	101-50951	27	101-53351		*			
L	1/2	12.7	11	101-51058	28	101-53450	41	101-56958			
M	5/8	15.9	12	101-51157	29	101-53559	42	101-57055			
N	3/4	19.1	13	101-51256	30	101-53658	43	101-57154			
P	7/8	22.2	14	101-51355	31	101-53757	44	101-57253		*	
Q	1	25.4	15	101-51454	32	101-53856	45	101-57352			
R	1-1/8	28.6	16	101-51553	33	101-53955	46	101-57451			
S	1-1/4	31.8	17	101-51652	34	101-54052	47	101-57550			
T	1-3/8	34.9	18	101-51751	35	101-54151	48	101-57659			
U	1-1/2	38.1	19	101-51750	36	101-54150	49	101-57658			

★ ··· Standard specification 標準仕様
☆ ··· Special specification 特別仕様
* ··· Special order part 特別注文部品
♦ ··· Except stitch specification"G" 縫仕様"G"は除く
▲ ··· Except stitch specification"S" 縫仕様"S"は除く

See also p.11 for stitch specifications"A","G"
縫仕様"A","G"については11ページも併せてご参照ください。

FOR STITCH SPECIFICATION "S","A","G" (1)

No.	C-ons	Le-vel	Parts No.	Replacement	Supply Code	Parts name	Qty	R-ep. Q-TY	Status	Spec	Remarks
1			10150050		Disconinue	PRESSER FOOT ASM. 3/32	1				
2			10150159		Disconinue	PRESSER FOOT ASM. 1/8	1				
3			10150258		Disconinue	PRESSER FOOT ASM. 5/32	1				
4			10150357			PRESSER FOOT ASM. 3/16	1				
5			10150456			PRESSER FOOT ASM. 7/32	1				
6			10150555		Disconinue	PRESSER FOOT ASM. 1/4	1				
7			10150654			PRESSER FOOT ASM. 9/32	1				
8			10150753		Disconinue	PRESSER FOOT ASM. 5/16	1				
9			10150852			PRESSER FOOT ASM. 3/8	1				
10			10150951			PRESSER FOOT ASM. 7/16	1				
11			10151058		Disconinue	PRESSER FOOT ASM. 1/2	1				
12			10151157			PRESSER FOOT ASM. 5/8	1				
13			10151256			PRESSER FOOT ASM. 3/4	1				
14			10151355			PRESSER FOOT ASM. 7/8	1				
15			10151454			PRESSER FOOT ASM. 1	1				
16			10151553			PRESSER FOOT ASM. 1-1/8	1				
17			10151652		Disconinue	PRESSER FOOT ASM. 1-1/4	1				
18			10151751			PRESSER FOOT ASM. 1-3/8	1				
19			10151750			PRESSER FOOT ASM. 1-1/2	1				
20			10152650			PRESSER FOOT ASM. 5/32	1				
21			10152759			PRESSER FOOT ASM. 3/16	1				
22			10152858			PRESSER FOOT ASM. 7/32	1				
23			10152957			PRESSER FOOT ASM. 1/4	1				
24			10153054			PRESSER FOOT ASM. 9/32	1				
25			10153153			PRESSER FOOT ASM. 5/16	1				
26			10153252			PRESSER FOOT ASM. 3/8	1				
27			10153351		Disconinue	PRESSER FOOT ASM. 7/16	1				
28			10153450			PRESSER FOOT ASM. 1/2	1				
29			10153559			PRESSER FOOT ASM. 5/8	1				
30			10153658			PRESSER FOOT ASM. 3/4	1				
31			10153757			PRESSER FOOT ASM. 7/8	1				
32			10153856			PRESSER FOOT ASM. 1	1				
33			10153955		Disconinue	PRESSER FOOT ASM. 1-1/8	1				
34			10154052			PRESSER FOOT ASM. 1-1/4	1				
35			10154151		Disconinue	PRESSER FOOT ASM. 1-3/8	1				
36			10154150			PRESSER FOOT ASM. 1-1/2	1				
37			10156651			PRESSER FOOT ASM. 3/16	1				
38			10156552		Disconinue	PRESSER FOOT ASM. 1/4	1				
39			10156750		Disconinue	PRESSER FOOT ASM. 5/16	1				
40			10156859			PRESSER FOOT ASM. 3/8	1				
41			10156958			PRESSER FOOT ASM. 1/2	1				
42			10157055		Disconinue	PRESSER FOOT ASM. 5/8	1				
43			10157154			PRESSER FOOT ASM. 3/4	1				
44			10157253		Disconinue	PRESSER FOOT ASM. 7/8	1				
45			10157352			PRESSER FOOT ASM. 1	1				
46			10157451		Disconinue	PRESSER FOOT ASM. 1-1/8	1				
47			10157550			PRESSER FOOT ASM. 1-1/4	1				
48			10157659			PRESSER FOOT ASM. 1-3/8	1				
49			10157658			PRESSER FOOT ASM. 1-1/2	1				
50			10155059			SWIVELGUIDE PRESSER FC	1				
51			10155158			PRESSER FOOT ASM. 5/16	1				

Stitch spec. 縫仕様														
	S	★							★		☆			
	A	★					★							
	G			★							★			
Needle gauge size 針幅			Throat plate 針板				Feed Dog 送り歯							
Code ゲージ記号			Stitch length 縫ピッチ：4mm		Stitch length 縫ピッチ：6mm		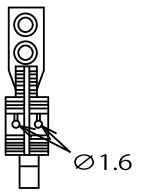 ∅1.6		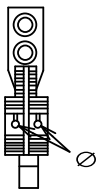 ∅1.9		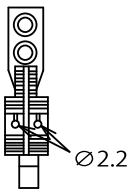 ∅2.2			
	inch	mm	Ref.No.	Part No.	Ref.No.	Part No.	Ref.No.	Part No.	Ref.No.	Part No.	Ref.No.	Part No.		
▲♦ A	3/32	2.4	1	101-35002			33	101-72500						
♦ B	1/8	3.2	2	101-35101			34	B1613-512-B0B (∅1.4)		*				
♦ C	5/32	4.0	3	101-35200			35	101-72708	52	102-69209	69	102-69308		
D	3/16	4.8	4	101-35309	20	101-37503	36	101-72807	53	B1613-512-D00	70	B1613-512-D0H		
E	7/32	5.6	5	101-35408		*	37	101-72906	54	B1613-512-E00	71	B1613-512-E0H		
F	1/4	6.4	6	101-35507	21	101-37602	38	101-73003	55	B1613-512-F00	72	B1613-512-F0H		
G	9/32	7.1	7	101-35606		*	39	101-73102	56	B1613-512-G00	73	B1613-512-G0H		
H	5/16	7.9	8	101-35705	22	101-37701	40	101-73201	57	B1613-512-H00	74	B1613-512-H0H		
K	3/8	9.5	9	101-35804	23	101-37800	41	101-73300	58	B1613-512-K00	75	B1613-512-K0H		
W	7/16	11.1	10	101-35903		*	42	101-73409	59	B1613-512-W00		*		
L	1/2	12.7	11	101-36000	24	101-37909	43	101-73508	60	B1613-512-L00	76	B1613-512-L0H		
M	5/8	15.9	12	101-36109	25	101-38006	44	101-73607	61	B1613-512-M00	77	B1613-512-M0H		
N	3/4	19.1	13	101-36208	26	101-38105	45	101-73706	62	B1613-512-N00	78	B1613-512-N0H		
P	7/8	22.2	14	101-36307	27	101-38204	46	101-73805	63	B1613-512-P00	79	B1613-512-P0H		
Q	1	25.4	15	101-36406	28	101-38303	47	101-73904	64	B1613-512-Q00	80	B1613-512-Q0H		
R	1-1/8	28.6	16	101-36505	29	101-38402	48	101-74001	65	B1613-512-R00	81	B1613-512-R0H		
S	1-1/4	31.8	17	101-36604	30	101-38501	49	101-74100	66	B1613-512-S00	82	B1613-512-S0H		
T	1-3/8	34.9	18	101-36703	31	101-38600	50	101-74209	67	B1613-512-T00	83	B1613-512-T0H		
U	1-1/2	38.1	19	101-36802	32	101-38709	51	101-74308	68	B1613-512-U00	84	B1613-512-U0H		

★ ··· Standard specification 標準仕様
☆ ··· Special specification 特別仕様
* ··· Special order part 特別注文部品
♦ ··· Except stitch specification"G" 縫仕様"G"は除く
▲ ··· Except stitch specification"S" 縫仕様"S"は除く

See also p.11 for stitch specifications"A","G"
縫仕様"A","G"については11ページも併せてご参照ください。

FOR STITCH SPECIFICATION ″S″,″A″,″G″ (2)

No.	C-ons	Le-vel	Parts No.	Replacement	Supply Code	Parts name	Qty	R-ep. Q-TY	Status	Spec	Remarks
1			10135002			THROAT PLATE 3/32	1				
2			10135101		Disconinue	THROAT PLATE 1/8	1				
3			10135200			THROAT PLATE 5/32	1				
4			10135309		Disconinue	THROAT PLATE 3/16	1				
5			10135408		Disconinue	THROAT PLATE 7/32	1				
6			10135507		Disconinue	THROAT PLATE 1/4	1				
7			10135606		Disconinue	THROAT PLATE 9/32	1				
8			10135705		Disconinue	THROAT PLATE 5/16	1				
9			10135804			THROAT PLATE 3/8	1				
10			10135903			THROAT PLATE 7/16	1				
11			10136000		Disconinue	THROAT PLATE 1/2	1				
12			10136109			THROAT PLATE 5/8	1				
13			10136208			THROAT PLATE 3/4	1				
14			10136307			THROAT PLATE 7/8	1				
15			10136406			THROAT PLATE 1	1				
16			10136505			THROAT PLATE 1-1/8	1				
17			10136604			THROAT PLATE 1-1/4	1				
18			10136703			THROAT PLATE 1-3/8	1				
19			10136802			THROAT PLATE 1-1/2	1				
20			10137503		Disconinue	THROAT PLATE 3/16	1				
21			10137602			THROAT PLATE 1/4	1				
22			10137701			THROAT PLATE 5/16	1				
23			10137800		Disconinue	THROAT PLATE 3/8	1				
24			10137909			THROAT PLATE 1/2	1				
25			10138006		Disconinue	THROAT PLATE 5/8	1				
26			10138105			THROAT PLATE 3/4	1				
27			10138204		Disconinue	THROAT PLATE 7/8	1				
28			10138303			THROAT PLATE 1	1				
29			10138402			THROAT PLATE 1-1/8	1				
30			10138501			THROAT PLATE 1-1/4	1				
31			10138600			THROAT PLATE 1-3/8	1				
32			10138709		Disconinue	THROAT PLATE 1-1/2	1				
33			10172500			FEED DOG 3/32	1				
34			B1613512B0B			FEED DOG 1/8	1				
35			10172708		Disconinue	FEED DOG 5/32	1				
36			10172807			FEED DOG 3/16	1				
37			10172906			FEED DOG 7/32	1				
38			10173003			FEED DOG 1/4	1				
39			10173102			FEED DOG 9/32	1				
40			10173201			FEED DOG 5/16	1				
41			10173300			FEED DOG 3/8	1				
42			10173409			FEED DOG 7/16	1				
43			10173508			FEED DOG 1/2	1				
44			10173607			FEED DOG 5/8	1				
45			10173706			FEED DOG 3/4	1				
46			10173805		Disconinue	FEED DOG 7/8	1				
47			10173904			FEED DOG 1	1				
48			10174001			FEED DOG 1-1/8	1				
49			10174100			FEED DOG 1-1/4	1				
50			10174209			FEED DOG 1-3/8	1				
51			10174308			FEED DOG 1-1/2	1				
52			10269209			FEED DOG 5/32	1				
53			B1613512D00		Disconinue	FEED DOG 3/16	1				
54			B1613512E00			FEED DOG 7/32	1				
55			B1613512F00			FEED DOG 1/4	1				
56			B1613512G00			FEED DOG 9/32	1				
57			B1613512H00			FEED DOG 5/16	1				
58			B1613512K00			FEED DOG 3/8	1				
59			B1613512W00		Disconinue	FEED DOG 7/16	1				
60			B1613512L00		Disconinue	FEED DOG 1/2	1				

Stitch spec. 縫仕様														
	S	★							★		☆			
	A	★					★							
	G			★							★			
Needle gauge size 針幅			Throat plate 針板				Feed Dog 送り歯							
Code ゲージ記号			Stitch length 縫ピッチ：4mm		Stitch length 縫ピッチ：6mm		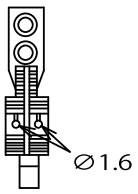 ∅1.6		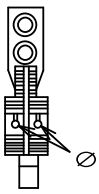 ∅1.9		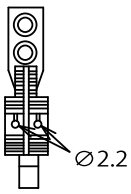 ∅2.2			
	inch	mm	Ref.No.	Part No.	Ref.No.	Part No.	Ref.No.	Part No.	Ref.No.	Part No.	Ref.No.	Part No.		
▲♦	A	3/32	2.4	1	101-35002			33	101-72500					
♦	B	1/8	3.2	2	101-35101			34	B1613-512-B0B (∅1.4)		*			
♦	C	5/32	4.0	3	101-35200			35	101-72708	52	102-69209	69	102-69308	
	D	3/16	4.8	4	101-35309	20	101-37503	36	101-72807	53	B1613-512-D00	70	B1613-512-D0H	
	E	7/32	5.6	5	101-35408		*	37	101-72906	54	B1613-512-E00	71	B1613-512-E0H	
	F	1/4	6.4	6	101-35507	21	101-37602	38	101-73003	55	B1613-512-F00	72	B1613-512-F0H	
	G	9/32	7.1	7	101-35606		*	39	101-73102	56	B1613-512-G00	73	B1613-512-G0H	
	H	5/16	7.9	8	101-35705	22	101-37701	40	101-73201	57	B1613-512-H00	74	B1613-512-H0H	
	K	3/8	9.5	9	101-35804	23	101-37800	41	101-73300	58	B1613-512-K00	75	B1613-512-K0H	
	W	7/16	11.1	10	101-35903		*	42	101-73409	59	B1613-512-W00		*	
	L	1/2	12.7	11	101-36000	24	101-37909	43	101-73508	60	B1613-512-L00	76	B1613-512-L0H	
	M	5/8	15.9	12	101-36109	25	101-38006	44	101-73607	61	B1613-512-M00	77	B1613-512-M0H	
	N	3/4	19.1	13	101-36208	26	101-38105	45	101-73706	62	B1613-512-N00	78	B1613-512-N0H	
	P	7/8	22.2	14	101-36307	27	101-38204	46	101-73805	63	B1613-512-P00	79	B1613-512-P0H	
	Q	1	25.4	15	101-36406	28	101-38303	47	101-73904	64	B1613-512-Q00	80	B1613-512-Q0H	
	R	1-1/8	28.6	16	101-36505	29	101-38402	48	101-74001	65	B1613-512-R00	81	B1613-512-R0H	
	S	1-1/4	31.8	17	101-36604	30	101-38501	49	101-74100	66	B1613-512-S00	82	B1613-512-S0H	
	T	1-3/8	34.9	18	101-36703	31	101-38600	50	101-74209	67	B1613-512-T00	83	B1613-512-T0H	
	U	1-1/2	38.1	19	101-36802	32	101-38709	51	101-74308	68	B1613-512-U00	84	B1613-512-U0H	

★ ··· Standard specification 標準仕様
☆ ··· Special specification 特別仕様
* ··· Special order part 特別注文部品
♦ ··· Except stitch specification"G" 縫仕様"G"は除く
▲ ··· Except stitch specification"S" 縫仕様"S"は除く

See also p.11 for stitch specifications"A","G"
縫仕様"A","G"については11ページも併せてご参照ください。

FOR STITCH SPECIFICATION "S","A","G" (2)

No.	C-ons	Le-vel	Parts No.	Replacement	Supply Code	Parts name	Qty	R-ep. Q-TY	Status	Spec	Remarks
61			B1613512M00			FEED DOG 5/8	1				
62			B1613512N00		Disconinue	FEED DOG 3/4	1				
63			B1613512P00			FEED DOG 7/8	1				
64			B1613512G00			FEED DOG 9/32	1				
65			B1613512R00			FEED DOG 1-1/8	1				
66			B1613512S00		Disconinue	FEED DOG 1-1/4	1				
67			B1613512T00			FEED DOG 1-3/8	1				
68			B1613512U00			FEED DOG 1-1/2	1				
69			10269308			FEED DOG 5/32	1				
70			B1613512D0H		Disconinue	FEED DOG 3/16	1				
71			B1613512E0H			FEED DOG 7/32	1				
72			B1613512F0H			FEED DOG 1/4	1				
73			B1613512G0H			FEED DOG 9/32	1				
74			B1613512H0H			FEED DOG 5/16	1				
75			B1613512K0H			FEED DOG 3/8	1				
76			B1613512L0H			FEED DOG 1/2	1				
77			B1613512M0H			FEED DOG 5/8	1				
78			B1613512N0H			FEED DOG 3/4	1				
79			B1613512P0H			FEED DOG 7/8	1				
80			B1613512Q0H			FEED DOG 1	1				
81			B1613512R0H			FEED DOG 1-1/8	1				
82			B1613512S0H			FEED DOG 1-1/4	1				
83			B1613512T0H			FEED DOG 1-3/8	1				
84			B1613512U0H			FEED DOG 1-1/2	1				

TABLE OF EXCHANGING GAUGE PARTS COMMON TO ALL STITCH SPECIFICATIONS

♦ ... Except stitch specification "G".
▲ ... Except stitch specification "S".
◊ ... Except "A","B" type for tape attaching with stitch specification "F".(see p.12)
Applicable needle gauge size to stitch specification "F" are 1/8",3/16",1/4",9/32" and 5/16"

縫仕様"G"は除く
縫仕様"S"は除く
縫仕様"F"のテープ付け"A","B"タイプの場合は除く。（12ページをご参照ください）
縫仕様"F"の適用針幅は1/8",3/16",1/4",9/32",5/16"のみです。

	Needle gauge size 針　幅			Needle Clamp asm. 針　留 (組)		Bed Side, Left 滑り板(左)		Bed Side, Right 滑り板(右)		Bushing asm.,Front 下軸前ﾒﾀﾙ(組)		Bushing asm.,Intermediate 下軸中ﾒﾀﾙ(組)	
	Code ゲージ記　号	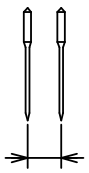		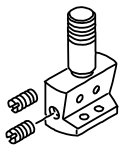		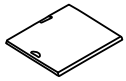				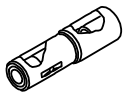		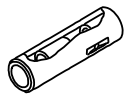	
		inch	mm	Ref.No.	Part No.	Ref.No.	Part No.	Ref.No.	Part No.	Ref.No.	Part No.	Ref.No.	Part No.
▲♦	A	3/32	2.4	1	101-47551	20	101-46009	24	101-46504	28	B1802-512-0A0-A	30	B1803-515-0A0
♦	B	1/8	3.2	2	101-47650								
♦	C	5/32	4.0	3	101-47759								
	D	3/16	4.8	4	101-47858								
	E	7/32	5.6	5	101-47957								
	F	1/4	6.4	6	101-48054								
	G	9/32	7.1	7	101-48153								
	H	5/16	7.9	8	101-48252								
	K	3/8	9.5	9	101-48351								
	W	7/16	11.1	10	101-48450								
	L	1/2	12.7	11	101-48559	21	101-46108	25	101-46603				
	M	5/8	15.9	12	101-48658								
	N	3/4	19.1	13	101-48757					29	B1802-512-0AB	31	101-12357
	P	7/8	22.2	14	101-48856	22	101-46207	26	101-46702				
	Q	1	25.4	15	101-48955								
	R	1-1/8	28.6	16	101-49052								
	S	1-1/4	31.8	17	101-49151	23	101-46306	27	101-46801				
	T	1-3/8	34.9	18	101-49250								
	U	1-1/2	38.1	19	101-49359								

TABLE OF EXCHANGING GAUGE PARTS COMMON TO ALL STITCH SPECIFICATIONS

No.	C-ons	Le-vel	Parts No.	Replacement	Supply Code	Parts name	Qty	R-ep. Q-TY	Status	Spec	Remarks
1			10147551			NEEDLE CLAMP ASM. 3/32	1				
2			10147650			NEEDLE CLAMP ASM. 1/8	1				
3			10147759			NEEDLE CLAMP ASM. 5/32	1				
4			10147858			NEEDLE CLAMP ASM. 3/16	1				
5			10147957			NEEDLE CLAMP ASM. 7/32	1				
6			10148054			NEEDLE CLAMP ASM. 1/4	1				
7			10148153			NEEDLE CLAMP ASM. 9/32	1				
8			10148252			NEEDLE CLAMP ASM. 5/16	1				
9			10148351			NEEDLE CLAMP ASM. 3/8	1				
10			10148450			NEEDLE CLAMP ASM. 7/16	1				
11			10148559			NEEDLE CLAMP ASM. 1/2	1				
12			10148658			NEEDLE CLAMP ASM. 5/8	1				
13			10148757			NEEDLE CLAMP ASM. 3/4	1				
14			10148856			NEEDLE CLAMP ASM. 7/8	1				
15			10148955			NEEDLE CLAMP ASM. 1	1				
16			10149052			NEEDLE CLAMP ASM. 1-1/	1				
17			10149151			NEEDLE CLAMP ASM. 1-1/	1				
18			10149250			NEEDLE CLAMP ASM. 1-3/	1				
19			10149359			NEEDLE CLAMP ASM. 1-1/	1				
20			10146009		Disconinue	BED SLIDE, LEFT 3/32″ TO	1				
21			10146108			BED SLIDE, LEFT 1/2″ TO	1				
22			10146207			BED SLIDE, LEFT 7/8″ TO	1				
23			10146306			BED SLIDE, LEFT 1-1/4″ T	1				
24			10146504		Disconinue	BED SLIDE, RIGHT 3/32″ T	1				
25			10146603			BED SLIDE, RIGHT 1/2″ TO	1				
26			10146702			BED SLIDE, RIGHT 7/8″ TO	1				
27			10146801			BED SLIDE, RIGHT 1-1/4″	1				
28			B18025120A0A			BUSHING ASM., FRONT	1				
29			B18025120AB			BUSHING ASM., FRONT	1				
30			B18035150A0			BUSHING ASM., INTERMED	1				
31			10112357			BUSHING ASM. INTERMED	1				

★・・・Standard specification　　標準仕様
＊・・・Special order part　　特別注文部品

Standard type 標準タイプ	★ common to stitch spec."S" 縫仕様"S"と共通			★		★
Tape attaching,A type テープ付けAタイプ		★		★		★
Tape attaching,B type テープ付けBタイプ			★		★	★
Needle gauge size 針幅	Throat Plate 針板			Feed Dog 送り歯		Presser Foot asm. 押さえ

Code ゲージ記号	inch	mm	Ref.No.	Part No.	Ref.No.	Part No.	Ref.No.	Part No.	Ref.No.	Part No.	Ref.No.	Part No.	Ref.No.	Part No.
B	1/8	3.2	1	101-35101	6	101-85304	12	101-85601	15	B1613-512-B0B	20	101-86302	23	101-85957
D	3/16	4.8	2	101-35309	7	101-85403	13	101-85700	16	B1613-512-D0B	21	101-86401	24	101-86054
F	1/4	6.4	3	101-35507		*		*	17	B1613-512-F0B		*		*
G	9/32	7.1	4	101-35606	11	101-85502	14	101-85809	18	B1613-512-G0B	22	101-86500	25	101-86153
H	5/16	7.9	5	101-35705		*		*	19	B1613-512-H0B		*		*

Note(注記)
All types of Needle Clamp asm.,Bushing asm.,Front,Bushing asm.,Intermediate, and Standard types of Bed Slide Left, Bed Slide Right,are common to stitch spefication "S". (See p.25)
全タイプの針留、下軸前メタル(組)、下軸中メタル(組)及び標準タイプの滑り板(組)、滑り板(左)、(右)は縫仕様"S"と共通です。(25ページをご参照ください。
See p.12 for the common parts to stitch specification "F".
縫仕様"F"共通部品については12ページをご参照下さい。

FOR STITCH SPECIFICATION″F

No.	C-ons	Le-vel	Parts No.	Replacement	Supply Code	Parts name	Qty	R-ep. Q-TY	Status	Spec	Remarks
1			10135101		Disconinue	THROAT PLATE 1/8	1				
2			10135309		Disconinue	THROAT PLATE 3/16	1				
3			10135507		Disconinue	THROAT PLATE 1/4	1				
4			10135606		Disconinue	THROAT PLATE 9/32	1				
5			10135705		Disconinue	THROAT PLATE 5/16	1				
6			10185304		Disconinue	THROAT PLATE 1/8	1				
7			10185403		Disconinue	THROAT PLATE 3/16	1				
8			10185502		Disconinue	THROAT PLATE 9/32	1				
9			10185601		Disconinue	THROAT PLATE 1/8	1				
10			10185700		Disconinue	THROAT PLATE 3/16	1				
11			10185809		Disconinue	THROAT PLATE 9/32	1				
12			B1613512B0B			FEED DOG 1/8	1				
13			B1613512D0B		Disconinue	FEED DOG 3/16	1				
14			B1613512F0B			FEED DOG 1/4	1				
15			B1613512G0B			FEED DOG 9/32	1				
16			B1613512H0B			FEED DOG 5/16	1				
17			10186302			FEED DOG 1/8	1				
18			10186401			FEED DOG 3/16	1				
19			10186500			FEED DOG 9/32	1				
20			10185957		Disconinue	PRESSER FOOT ASM. 1/8	1				
21			10186054		Disconinue	PRESSER FOOT ASM. 3/16	1				
22			10186153		Disconinue	PRESSER FOOT ASM. 9/32	1				

LIST FOR INFORMATION OF CHANGE

As to the place changed, refer to the corresponding Rev.No.
When previous parts(Obsoleted part)and new parts(Added parts)are not interchangeable with each other:
In this case,even obsoleted parts(D.)can be ordered with the obsoleted part number,so select the parts with changed dates and place your orders.

変更箇所は,該当Rev.No.版をご参照ください。
部品の互換性がない変更の場合は,削除された品番でも,ご注文できます。

BE1152S0PJA
No.0128-09・・Rev.No.

*A:Added parts追加部品/D:Obsoleted parts削除部品/E:Erratum訂正

*	Rev. No.	Page 頁	Ref. No.	Parts No. 品　番	*	Rev. No.	Page 頁	Ref. No.	Parts No. 品　番
D	08	16	20	B3140-527-000	A	09	16	20	226-17609
D	08	16	21	SS-8080410-TP	A	09	16	21	226-18904
D	08	16	22	SS-8080610-SP	A	09	16	22	226-18904
D	08	17	7	101-61503	A	09	17	7	109-58759
D	08	20	1	101-62758	A	09	20	1	269-10158

NUMERICAL INDEX OF PARTS

PART NO	PAGE	REF NO.
10039105	26	10
10039105	28	7
10100659	2	44
10100758	2	16
10100808	2	15
10100907	2	2
10101004	2	4
10101103	2	24
10101202	2	33
10101301	2	29
10101400	2	22
10101509	2	20
10102507	4	20
10102655	4	10
10102705	4	6
10102853	4	1
10103000	4	21
10103109	4	25
10103257	4	27
10103406	4	32
10104602	4	37
10104701	4	7
10104859	4	38
10105575	14	37
10105609	14	3
10106003	10	43
10106102	6	62
10106102	10	48
10106201	10	60
10106300	10	27
10106458	12	62
10106557	10	56
10106656	12	64
10106805	10	54
10106904	10	3
10107001	10	2
10107159	10	5
10107209	10	25
10107357	16	7
10107506	10	8
10107753	10	37
10108009	10	11
10108512	8	1
10108611	8	11
10108751	8	13
10109007	8	41
10109106	8	50
10109205	8	40
10109809	8	38
10109908	8	28
10110104	8	18
10110153	8	17
10110203	8	20
10110252	8	19
10110401	8	21
10110500	8	22
10110609	8	23
10111805	8	27
10112050	8	6
10112357	38	31
10112407	8	29
10121069	4	44
10121309	4	46
10121408	4	51
10121556	4	48
10121606	4	58
10121705	4	33
10121952	6	64
10122109	6	59
10122257	6	69
10123305	14	17
10123453	24	1
10124055	24	5
10124501	24	4
10124758	16	1
10124758	18	1
10124766	24	2
10124774	16	5
10125003	14	6
10125102	14	19
10125201	14	20
10125557	20	5
10125755	20	2
10125904	20	19
10126001	20	18
10126555	20	43
10126654	20	41
10126803	20	40
10126902	20	14
10127009	20	13
10128007	26	6
10128007	28	4
10128056	26	1
10128064	28	1
10128106	26	3
10128106	28	2
10135002	34	1
10135101	34	2
10135101	40	1
10135200	34	3
10135309	2	41
10135309	34	4
10135309	40	2
10135408	34	5
10135507	34	6
10135507	40	3
10135606	34	7
10135606	40	4
10135705	34	8
10135705	40	5
10135804	34	9
10135903	34	10
10136000	34	11
10136109	34	12
10136208	34	13
10136307	34	14
10136406	34	15
10136505	34	16
10136604	34	17
10136703	34	18
10136802	34	19
10137503	34	20
10137602	34	21
10137701	34	22
10137800	34	23
10137909	34	24
10138006	34	25
10138105	34	26
10138204	34	27
10138303	34	28
10138402	34	29
10138501	34	30
10138600	34	31
10138709	34	32
10146009	2	39

NUMERICAL INDEX OF PARTS

PART NO	PAGE	REF NO.
10146009	38	20
10146108	38	21
10146207	38	22
10146306	38	23
10146504	2	42
10146504	38	24
10146603	38	25
10146702	38	26
10146801	38	27
10147551	38	1
10147650	38	2
10147759	38	3
10147858	4	40
10147858	38	4
10147957	38	5
10148054	38	6
10148153	38	7
10148252	38	8
10148351	38	9
10148450	38	10
10148559	38	11
10148658	38	12
10148757	38	13
10148856	38	14
10148955	38	15
10149052	38	16
10149151	38	17
10149250	38	18
10149359	38	19
10150050	32	1
10150159	32	2
10150258	32	3
10150357	32	4
10150456	32	5
10150555	32	6
10150654	32	7
10150753	32	8
10150852	32	9
10150951	32	10
10151058	32	11
10151157	32	12
10151256	32	13
10151355	32	14
10151454	32	15
10151553	32	16
10151652	32	17
10151750	32	19
10151751	32	18
10152650	32	20
10152759	14	32
10152759	32	21
10152858	32	22
10152957	32	23
10153054	32	24
10153153	32	25
10153252	32	26
10153351	32	27
10153450	32	28
10153559	32	29
10153658	32	30
10153757	32	31
10153856	32	32
10153955	32	33
10154052	32	34
10154150	32	36
10154151	32	35
10155059	32	50
10155158	32	51
10156552	32	38
10156651	32	37
10156750	32	39
10156859	32	40
10156958	32	41
10157055	32	42
10157154	32	43
10157253	32	44
10157352	32	45
10157451	32	46
10157550	32	47
10157658	32	49
10157659	32	48
10160851	2	17
10161057	4	28
10161156	16	8
10161552	26	2
10162204	22	2
10162253	22	1
10162402	22	25
10162501	22	24
10162600	22	3
10172500	34	33
10172708	34	35
10172807	34	36
10172906	34	37
10173003	34	38
10173102	34	39
10173201	34	40
10173300	34	41
10173409	34	42
10173508	34	43
10173607	34	44
10173706	34	45
10173805	34	46
10173904	34	47
10174001	34	48
10174100	34	49
10174209	34	50
10174308	34	51
10178754	14	28
10179208	6	61
10179307	8	49
10185056	18	8
10185106	18	7
10185205	18	6
10185304	40	6
10185403	40	7
10185502	40	8
10185601	40	9
10185700	40	10
10185809	40	11
10185957	40	20
10186054	40	21
10186153	40	22
10186302	40	17
10186401	40	18
10186500	40	19
10188001	16	9
10188902	4	19
10197655	8	51
10269209	34	52
10269308	36	69
10419307	26	4
10419307	28	23
10602902	2	3
10623403	20	25

NUMERICAL INDEX OF PARTS

PART NO	PAGE	REF NO.
10741759	2	5
10958759	26	7
11007101	14	7
11024015	22	7
11024106	22	8
11024205	22	11
11024304	22	23
11047107	22	4
11071602	14	38
11071701	14	24
11071800	14	34
11072204	24	14
11077567	26	13
11078003	26	22
11078102	26	20
11078102	28	17
11078250	26	14
22602601	2	43
22617609	24	20
22618904	24	22
22619001	20	27
22621056	28	11
22621106	28	19
22621155	28	10
22904155	4	22
22904155	10	50
22907109	14	30
22907406	14	26
22907703	14	25
22912109	10	18
22925101	20	1
22930309	30	7
22930408	30	5
22930507	30	2
22930556	30	20
22930705	30	3
22930804	30	11
22930903	30	10
22931000	30	9
22931109	30	8
22931307	30	6
22931406	30	4
22932453	22	10
22934202	22	20
22934251	22	16
22934301	22	21
22934400	22	19
22934509	22	17
22934608	22	18
26910158	30	1
B1111563000	2	37
B1114051000	2	10
B1123552000A	2	26
B1123552A00	2	27
B1132512000	2	34
B1147555000	10	19
B1212552A00	4	13
B12135520A0A	4	16
B1214019000	4	24
B1214038000	20	9
B1412352A00	4	56
B1414555000	4	9
B1501581000	14	27
B1505227T00A	18	3
B1509555000	14	22
B1511555000	14	23
B1513280000	10	7
B1515415000	14	9
B1517415000	14	1
B1521555000	14	33
B1522180000	14	11
B1523226000	14	5
B1531415000	14	10
B1603512000	10	46
B1604012000A	10	41
B1610484000	10	28
B1610512000	10	34
B1613512B0B	34	34
B1613512B0B	40	12
B1613512D00	10	36
B1613512D00	34	53
B1613512D0B	40	13
B1613512D0H	36	70
B1613512E00	34	54
B1613512E0H	36	71
B1613512F00	34	55
B1613512F0B	40	14
B1613512F0H	36	72
B1613512G00	34	56
B1613512G00	36	64
B1613512G0B	40	15
B1613512G0H	36	73
B1613512H00	34	57
B1613512H0B	40	16
B1613512H0H	36	74
B1613512K00	34	58
B1613512K0H	36	75
B1613512L00	34	60
B1613512L0H	36	76
B1613512M00	36	61
B1613512M0H	36	77
B1613512N00	36	62
B1613512N0H	36	78
B1613512P00	36	63
B1613512P0H	36	79
B1613512Q0H	36	80
B1613512R00	36	65
B1613512R0H	36	81
B1613512S00	36	66
B1613512S0H	36	82
B1613512T00	36	67
B1613512T0H	36	83
B1613512U00	36	68
B1613512U0H	36	84
B1613512W00	34	59
B16234700A0	10	20
B16234700AA	10	21
B1624380000	10	14
B162438000A	10	15
B1633470000	12	66
B1634470000	10	17
B1636581B00	10	32
B1637432000	10	31
B1649161000	10	23
B1652470000	10	55
B18025120A0A	8	2
B18025120A0A	38	28
B18025120AB	38	29
B18035150A0	8	10
B18035150A0	38	30
B18165120A0	8	4
B1818051B00	8	48
B1820563000	8	31
B1821051000	8	33
B1822051000	8	34

NUMERICAL INDEX OF PARTS

PART NO	PAGE	REF NO.
B1823051000	8	37
B1834512000A	20	35
B18405120A0	8	8
B1850512000	20	30
B1851512000	20	29
B1860512000	8	43
B1903552000	4	8
B19045520A0	4	2
B1905541B00	4	5
B2906415000	4	57
B29074150A0	4	35
B2913412N00	4	50
B2915415000	4	52
B3120125000	24	13
B3125012000	24	27
B3125012000	26	18
B3125012000	28	15
B3125527000	24	26
B3126012000	26	16
B3126012000	28	13
B3126051000	24	10
B3127051000	24	9
B3127527000	24	8
B3128051000	24	3
B3128527000	24	19
B3129012A00	24	12
B3129012B00	26	17
B3129012B00	28	14
B3129526000	16	6
B3132051000	24	11
B3134521000	24	6
B3135415000	14	15
B31375270A0	24	16
B3138512000	2	31
B3138527000	24	23
B3139527000	24	18
B3141527000	24	25
B3142527000	24	17
B3143527000	24	15
B3211555000	26	21
B3211555000	28	18
B3431581000	14	2
B3524552000	20	6
B3530555000	20	15
B3534155000	20	8
B3538112000	20	23
B8228125000	22	15
B9117051000	8	24
BP300000000	20	39
CM300200001	2	49
CM3002000B1	2	50
CM300200101	2	47
CM3002001A1	2	48
CQ200000000	6	60
CQ202000000	8	36
CQ252000000	10	52
CQ303000000	12	61
CQ3500000F0	4	3
CS102121ASH	10	9
CS1470710SH	8	52
D3129555D00	16	2
D3129555D00	18	2
MC200500650	16	4
MC200500650	18	5
MC200500900	4	43
MC200501300	16	11
MDP500B1400	4	42
MDP500B2100	16	10
MSG19060900	16	3
MSG19650900	18	4
NM6050001SE	30	18
NM6060001SE	22	12
NM6160511SE	30	17
NS6080210SP	10	44
NS6090310SP	20	32
NS6110310SP	20	44
NS6110420SP	8	35
NS6110420SP	10	24
NS6110420SP	20	34
NS6620310SP	2	11
NS6680320SP	6	71
NS6680410SP	6	67
NS6680410SP	10	59
NS6680410SP	12	63
RE0500711KP	10	40
RE0600000K0	14	4
RE1000000K0	22	9
RO029180100	4	17
RO037180100	14	35
RO044240100	4	14
RO074240100	10	16
RO098240100	22	6
RO195240100	20	16
RO437200200	4	30
SB120000100	4	29
SB120000200	8	14
SB30953010C	8	39
SD0470281SP	24	7
SD0490261SP	26	23
SD0490261SP	28	20
SD0600322SD	14	21
SD0630275SP	14	12
SD0630301SP	14	8
SD0640231SP	14	16
SD0720331SP	14	18
SD0900701TP	6	68
SD0900701TP	10	58
SD0900702TP	10	4
SK3482500SC	26	11
SK3482500SC	28	8
SM0081001SD	22	5
SM4051405SE	30	13
SM6061610SC	30	12
SM7082550SP	8	46
SM8050502TP	10	42
SM8063012TR	22	13
SM9061203SE	22	22
SM9061853SR	22	14
SQ1110401MZ	20	21
SQ1150451MZ	20	11
SS2080810SP	2	25
SS2090710SP	2	23
SS2110920TP	2	40
SS2110930SP	10	30
SS2110930SP	20	28
SS3130710SP	2	45
SS4110515SP	26	19
SS4110515SP	28	16
SS5090610SP	2	30
SS6060410TP	4	54
SS6081810SP	10	45
SS6090660TP	4	55
SS6090810SP	8	25
SS6110610TP	8	16
SS6110710TP	10	1

NUMERICAL INDEX OF PARTS

PART NO	PAGE	REF NO.
SS6111610SP	20	26
SS6121050SP	10	22
SS6121220TP	4	36
SS6121610TP	4	49
SS6121610TP	6	70
SS6121610TP	10	57
SS6153040SP	8	30
SS6580752TP	10	35
SS6661110SP	4	26
SS6661110SP	10	29
SS7060610SP	8	44
SS7080520SP	14	13
SS7081310SP	26	24
SS7081310SP	28	21
SS7090520SP	2	32
SS7090520SP	24	24
SS7090910SP	4	47
SS7090910SP	20	31
SS7090910TP	14	31
SS7110340SP	20	42
SS7110510SP	2	38
SS7110510SP	12	65
SS7110510SP	26	5
SS7110510SP	28	3
SS7110710SP	2	6
SS7110710SP	20	24
SS7110710SP	24	28
SS7110840SP	26	15
SS7110840SP	28	12
SS7110910SP	2	1
SS7110910SP	10	53
SS7111120SP	2	18
SS7111310TP	10	47
SS7111410SP	20	45
SS7111810SP	20	17
SS7150740SP	26	9
SS7150740SP	28	6
SS7681650TP	4	15
SS8080660TP	4	41
SS8110320SP	18	9
SS8110410TP	8	53
SS8110510SP	4	45
SS8150510TP	4	34
SS8150510TP	8	9
SS8151150SP	4	4
SS8151150SP	6	63
SS8151150SP	8	12
SS8151550SP	4	31
SS8151550SP	8	47
SS8152030SP	8	3
SS8660530TP	8	7
SS8660610TP	4	23
SS8660610TP	8	15
SS8660610TP	10	51
SS8660610TP	14	29
SS8660810TP	8	5
SS8660810TP	10	12
SS8661040TP	10	13
SS8681130SP	10	49
SS8681950SP	4	12
SS9111820SP	8	42
SS9151440CP	10	39
SS9661120CP	4	11
TA0550604R0	2	8
TA0750404R0	2	36
TA0750704R0	2	12
TA1050604R0	2	35
TA1250406R0	2	19
TA1250504R0	2	9
TA2050406R0	2	46
TA2100904R0	2	14
TA2351004R0	2	7
WP0250516SD	4	53
WP0330500MB	14	14
WP0371016SD	8	26
WP0480856SP	26	25
WP0480856SP	28	22
WP0501016SC	26	12
WP0501016SC	28	9
WP0621016SD	10	38
WP0621016SD	26	8
WP0621016SD	28	5
WP0740516SP	6	66
WP0740516SP	14	36
WP0850002SP	8	45
WP1612616SE	30	15
WS0510002KN	30	19
WS1643202KR	30	16